Requirements Specification

for

New Gambling Device Submission and Modification

Montana Department of Justice – Gambling Control Division

November 20, 2019
Version 2.1

Table of Contents

Table of Contents **1**
Revision History **3**
1. Introduction **5**
1.1 Purpose 5
1.2 Intended Audience 5
1.3 References 5
2. VGM Architecture Guidelines and Best Practices **6**
3. Electronic Live Keno/Bingo Device **7**
3.1 General Requirements 7
3.2 Software Requirements 7
3.3 Validation Requirements 7
4. Video Gambling Machine **9**
4.1 General Printer Requirements 9
4.2 Device Identification Requirements 9
4.3 Bill Acceptor Requirements 9
4.4 Cash Area Requirements 10
4.5 Logic Board Area Requirements 10
4.6 Player Awareness Requirements 10
4.7 Mechanical Meter Requirements 11
4.8 General Requirements 12
4.9 Video Poker Game Title Requirements 13
4.10 Video Keno Game Title Requirements 14
4.11 Video Bingo Game Title Requirements 14
4.12 Bonus Game Requirements 15
4.13 Global Bonus Game Requirements 16
4.14 Free Game or Altered Play Requirements 16
4.15 RNG Requirements 17
4.16 Accounting Requirements 17
4.17 Cash Ticket Requirements 20
4.18 Multi-Denomination & Multi-Game Requirements 21
4.19 Progressive and Incrementing Features Requirements 21
4.20 Linked VGM Requirements 23
4.21 SAS Requirements 24
4.22 SAS General Poll Exception Requirements 25
4.23 SAS Long Poll Command Requirements 27
4.24 Source Code Requirements 30
4.25 Video Line Game Title Requirements 30
4.26 Validation Requirements 31
4.27 History Recall Requirements 32
5. Audit Storage Device **34**
5.1 Device Requirements 34
5.2 Data File Requirements 34
5.2.1 Audit Log Files 35
5.2.2 Progressive Log Files 36
5.2.3 Games Data Files 38
5.3 Security Requirements 39
5.4 VGM Requirements 39
Appendix A: Glossary **41**
Appendix B: Static Test Procedure **45**
Appendix C: RNG Test **46**
Appendix D: SAS to MT Cross Reference **48**

Appendix E: Prohibited SAS Long Polls **49**
Appendix F: USB Flash Drive Durability Testing **50**
Appendix G: readme.txt **51**
Appendix H: Sample ASD Data Files **53**

Revision History

Date	Version	Reason For Changes
11/20/2019	**2.1**	Clarified REQ-LIVE-GEN-03, REQ-VGM-MECHMETER-04, REQ-VGM-PLAYER-11, REQ-VGM-GEN-15, REQ-VGM-GEN-18, REQ-VGM-GEN-19, REQ-VGM-POKER-01, REQ-VGM-KENO-01, REQ-VGM-BINGO-01, REQ-VGM-ACCOUNTING-01, REQ-VGM-ACCOUNTING-03, REQ-VGM-ACCOUNTING-07, REQ-VGM-CASHTICKET-01, REQ-VGM-PROGRESSIVE-04, REQ-VGM-PROGRESSIVE-05, REQ-VGM-SAS-03, REQ-VGM-SAS-07, REQ-VGM-SASLONGPOLL-01, REQ-VGM-LINE-01, REQ-VGM-VAL-02.2, REQ-VGM-HISTORY-01 to 03, REQ-VGM-HISTORY-05. Added REQ-VGM-BA-05, REQ-VGM-HISTORY-07, REQ-VGM-PLAYER-20, REQ-VGM-GEN-21, REQ-VGM-LINKVGM-10. Removed REQ-VGM-SASLONGPOLL-03 to 11.
5/15/2018	2.0	Major revisions, clarification and reformatting too numerous to list. Expanded Appendix A: Glossary. Merged ASD Requirements document into a new section 5: ASD and Appendix F, G and H. Updated Appendix B & C. Removed: REQ-LIVE-GEN-05, REQ-VGM-GEN-02, REQ-VGM-GEN-04, REQ-VGM-GEN-16, REQ-VGM-BONUS-12, REQ-VGM-SASEXCEPTION-31, REQ-ASD-HW-6. Added: REQ-LIVE-GEN-05, REQ-VGM-BA-04, REQ-VGM-GEN-18 to 20, REQ-VGM-RNG-04, REQ-VGM-MULTI-06, REQ-VGM-PROGRESSIVE-11 to 13, REQ-VGM-SASEXCEPTION-35, REQ-VGM-SASEXCEPTION-36, REQ-VGM-LINE-11, Section 4.27 History Recall requirements. Moved: REQUIREMENT-VGM-IMPACTPRINT-01 and REQUIREMENT-VGM-THRMPRINT-01 into General Printer Requirements, REQ-VGMLOGIC-06 to REQ-VGM-GEWN-17, REQ-VGM-BONUS-12 to REQ-VGM-PROGRESSIVE-14. Clarified: Access, Audit and Jackpot Alter Tickets. Renamed: Linked Progressive to Linked VGM.
5/16/2017	1.9	Added REQ-VGM-BONUS-11 and REQ-VGM-BONUS-12. Clarified REQ-VGM-BONUS-09. Added Definitions for associated terms in Appendix A.
5/8/15	1.8	Modified REQ-LIVE-VAL-04 and REQ-VGM-VAL-04. Added REQ-VGM-SASEXCEPTION-34, REQ-VGM-SASLONGPOLL-41 and Appendix F
4/9/15	1.7	Modified REQ-VGM-GEN-07, REQ-VGM-VAL-01, REQ-VGM-VAL-02, REQ-VGM-SAS-12, and added REQ-VGM-VAL-02.2, REQ-VGM-VAL-04, REQ-LIVE-VAL-02.2, REQ-LIVE-VAL-04. Clarified REQ-VGM-PLAYER-02.
2/17/15	1.6	Clarified REQ-VGM-PLAYER-09, REQ-VGM-PROGRESSIVE-10, REQ-VGM-ACCOUNTING-01.
1/21/15	1.5	Added REQ-LIVE-VAL-01, REQ-LIVE-VAL-02, REQ-LIVE-VAL-03, REQ-VGM-SAS-12 and Appendix E. Modified REQ-VGM-PLAYER-10, REQ-VGM-FREEALTER-08, and REQ-VGM-PROGRESSIVE-01, 02, 05, 09, 10 for clarity. Removed REQ-LIVE-GEN-01. Corrected REQ-VGM-ACCOUNTING-01and Appendix D. Updated REQ-VGM-POKER-08. Modified Appendix C Baud rate.
1/15/14	1.4	Added REQ-VGM-SAS-11, REQ-VGM-SASLONGPOLL-40, REQ-VGM-FREEALTER-08, REQ-VGM-GEN-16, REQ-VGM-ID-03, and REQ-VGM-ACCOUNTING-17. Modified REQ-VGM-VAL-01, REQ-VGM-VAL-02, and REQ-VGM-VAL-03 for requirements on GAT connector. Clarified REQ-VGM-SASEXCEPTION-30, REQ-VGM-ACCOUNTING-02, and REQ-VGM-VAL-03, REQ-VGM-BONUS-02, REQ-VGM-KENO-11, and REQ-VGM-ACCOUNTING-07. Removed REQ-VGM-KENO-09. Modified REQ-VGM-SAS-04 and REQ-

		VGM-SAS-05 to note that SAS automation tool is available. Modified Appendix A: Glossary to add terms and definitions for Global Bonus and VGMID.
12/11/12	1.3	Clarified REQ-VGM-SASLONGPOLL-38. Added REQ-VGM-VAL-03.
11/30/12	1.2	Modified REQ-VGM-PLAYER-14 for clarity. Modified REQ-VGM-POKER-06 and REQ-VGM-POKER-07 to clarify cards dealt. REQ-VGM-CASHTICKET-01 clarified bar code. Modified REQ-SASEXCEPTION-31 for clarity.
10/26/12	1.1	Modified REQ-VGM-BONUS-02 for clarity. Corrected REQ-VGM-CASHTICKET-01 by adding "title" to the required cashout ticket contents. Modified REQ-VGM-VAL-01 to remove requirement that GAT connection be female.
10/09/12	1.0	REQ-VGM-BA-03 added $100 bill, REQ-VGM-PLAYER-16 removed text, modified REQ-VGM-CASHTICKET-01, REQ-VGM-BONUS-02 clarified winning combination, REQ-VGM-BONUS-05 clarified when to increment GPLD and GWON, REQ-VGM-PROGRESSIVE-01 clarified denomination, REQ-VGM-MULTI-02 clarification on game specific meters, REQ-VGM-SASEXCEPTION-33 clarified exception, REQ-VGM-SAS-03 modified SAS address, REQ-VGM-SASLONGPOLL-21 removed text, REQ-VGM-SASLONGPOLL-22 removed text and Updated Appendix D. Added REQ-VGM-PLAYER-19, REQ-VGM-FREEALTER-06, REQ-VGM-FREEALTER-07, REQ-VGM-ACCOUNTING-16, REQ-VGM-SASLONGPOLL-38, REQ-VGM-SASLONGPOLL-39, REQ-VGM-VAL-01 and REQ-VGM-VAL-02.
09/30/11	-	Modified REQ-VGM-PLAYER-02 to include an additional label, REQ-VGM-PLAYER-15 to clarify game history, REQ-VGM-BONUS-02 to clarify a Bonus Game, REQ-VGM-ACCOUNTING-01 to clarify when Multi-Game and Progressive Jackpot meters are required to be printed, REQ-VGM-CASHTICKET-01 to include "Ticket Void After 48 hours" on the cashout ticket, REQ-VGM-MULTI-02 to clarify when game specific meters are required, REQ-VGM-PROGRESSIVE-04 removed reference to impact printer and Appendix C: RNG Test, included line game requirements and removed sample program used to gather RNG data. Added REQ-VGM-PLAYER-18, REQ-VGM-GEN15, REQ-VGM-MULTI-05 and 4.27 Video Line Game Requirements.
12/17/10	-	Modify REQ-VGM-SAS-10 for link down condition and hand pays. Add REQ-VGM-PLAYER-17. Remove REQ-VGM-FREEALTER-06 (must be able to cash out on Free Games).
10/22/10	-	Add SAS Requirements. Modify REQ-VGM-LINKPROGRESSIVE-03 and REQ-VGM-LINKPROGRESSIVE-09. Added REQ-VGM-GEN-14.
9/22/10	-	Modified requirements REQ-VGM-PLAYER-10, REQ-VGM-MULTI-02, REQ-VGM-PROGRESSIVE-04, REQ-VGM-ACCOUNTING-01, REQ-VGM-GEN-11, REQ-VGM-LINKPROGRESSIVE-05, REQ-VGM-LINKPROGRESSIVE-06, REQ-VGM-PROGRESSIVE-10.
4/26/10	-	Add requirement REQ-VGM-POKER-11, REQ-VGM-PROGRESSIVE-08, REQ-VGM-PROGRESSIVE-09, REQ-VGM-SAS-03.
2/9/10	-	Change number of progressive logs to print to be five in REQ-VGM-PROGRESSIVE-04.
1/25/10	-	Added static test requirement.
1/19/10	-	Review changes.
1/15/10	-	Review changes and updates.
12/18/09	-	Initial Version.

1. Introduction

1.1 Purpose

The purpose of this document is to define the requirements specifications for new gambling device submission and modification.

1.2 Intended Audience

The intended audience for this requirements speciation document is new and existing VGM manufacturers who wish to submit VGM and/or Live Keno/Bingo equipment for approval to operate in the State of Montana.

1.3 References

Montana SAS Implementation Guidelines: https://dojmt.gov/gaming/vgm-tier1-testing/

Scarne's Encyclopedia of Card Games by John Scarne, copyright 1983

Naval Website for Daylight Savings: http://aa.usno.navy.mil/faq/docs/daylight_time.php

Official Montana Poker Rulebook, 1990 edition.

GAT (Game Authentication Terminal): http://www.gamingstandards.com

Daylight Savings: http://aa.usno.navy.mil/faq/docs/daylight_time.php

FAT File System: http://www.microsoft.com/whdc/system/platform/firmware/fatgen.mspx

Newline Guidelines: http://www.unicode.org/versions/Unicode4.0.0/ch05.pdf (see paragraph 5.8)

RSA Cryptography: http://www.ietf.org/rfc/rfc3447.txt

SHA-1: http://www.ietf.org/rfc/rfc3174.txt

SSH Key File Format: http://www.ietf.org/rfc/rfc4716.txt

2. VGM Architecture Guidelines and Best Practices

The purpose of this section is to provide VGM manufacturers with suggested guidelines and best practices to be incorporated into their VGM design and architecture. Suggestions in this section are not mandatory requirements but will help to speed up the regulatory approval process, so consideration is in the manufacturer's best interest.

- Modularize the source code. Isolate Game Titles from their engines and core software. Isolate paytables and customizations from source code so that it can be changed without rebuilding the binaries.

- Simplify and speed up the build process. Faster builds can lead to faster approval times. If OS images remain static and unchanged separate them from the game binaries so they do not have to be rebuilt for every submission.

- Self-validation carries no merit. All VGMs will be externally and independently validated in the field.

- Limit the number of different binary versions for one VGM. Sometimes different versions or paytables are required for marketing purposes but every binary version is a new submission and build.

- Ensure the game media (EPROM, CD, CF, Hard Drive, SSD, etc.) are easily removable from the front of the VGM. Individual wires and harness only add to the burden in the field inspection process. The best solution is a tray that slides into a connector that is easily removed.

3. Electronic Live Keno/Bingo Device

3.1 General Requirements

REQ-LIVE-GEN-02: The live gambling device shall have its Programmable Read-Only Memory and/or storage media easily removable, if applicable.

REQ-LIVE-GEN-03: The live gambling device shall contain a metal (with a contrasting color from the background) non-removable manufacturer identification tag affixed to a location approved by GCD TSS. The identification tag shall not be hand engraved.

REQ-LIVE-GEN-04: The live gambling device manufacturer identification tag shall contain the manufacturer, model number, serial number and date of manufacture. The font used on the identification tag shall differentiate between alpha "O" and numeric "0", if applicable.

REQ-LIVE-GEN-05: The live gambling device shall not expose players to any physical, electrical or mechanical hazards.

3.2 Software Requirements

REQ-LIVE-SW-01: The live gambling device shall use an RNG to generate game numbers.

REQ-LIVE-SW-02: The live gambling device shall display all the numbers that were drawn.

REQ-LIVE-SW-03: The live gambling device shall operate in conformance with the standard rules of Keno/Bingo as applicable.

3.3 Validation Requirements

REQ- LIVE-VAL-01: The live gambling device shall incorporate a RS232 DB9 connector implementing the standard pin out as defined by the EIA-232 standard. The connector shall be easily accessible and shall be identified as "GAT" through clear physical or software labeling. With GAT enabled on the live device, the connector shall be dedicated solely for GAT communication.

REQ- LIVE-VAL-02: The live gambling device shall incorporate GAT version 3.5 or later for verifying all components including unused space. A GAT test tool can be provided from the GCD upon request. Refer to the Gaming Standards web site for protocol specifications: gamingstandards.com.

REQ- LIVE-VAL-02.2: GAT shall be enabled at all times.

REQ- LIVE-VAL-03: The live gambling device shall send the file *ProgramID.xml* in response to the GAT3 request "Get File ProgramID.xml." *ProgramID.xml* will be of the following form, where *XXXXXX* is the Program Name of the live gambling device software:

```
<?xml version="1.0"?>
<ProgramID>
```

```
    <Value>XXXXXX</Value>
  </ProgramID>
```

Refer to GSA GAT Protocol section 4.2.2 for "Special Function: Get File filename.xml."

REQ-LIVE-VAL-04: The live gambling device shall complete the GAT authentication process within 5 minutes testing, at a minimum, all Control Program components and unused space on that partition (if applicable). If required, graphics and sound files and all unused space may be excluded from these calculations in order to meet this timeframe requirement. The option to enable or disable calculations over these components must be available upon request at the live gambling device.

4. Video Gambling Machine

4.1 General Printer Requirements

REQ-VGM-GENPRINT-01: The VGM shall halt game play and display a “printer error" message if the printer loses power.

REQ-VGM-GENPRINT-02: The printer shall reside in a locked area of the VGM.

REQ-VGM-GENPRINT-03: The VGM shall halt game play and display a “paper out" message if there is insufficient paper to print any ticket.

REQ-VGM-GENPRINT-04: The VGM shall detect access to the cash and logic areas during a printer error and print after the error is corrected.

REQ-VGM-GENPRINT-05: The VGM shall detect printer errors even if the power is cycled.

REQ-VGM-GENPRINT-06: All printed tickets shall be visible to the player upon printing completion.

REQ-VGM-GENPRINT-07: The VGM using an impact printer shall produce a duplicate copy (audit) of original ticket.

REQ-VGM-GENPRINT-08: The VGM using a thermal printer shall conform to the ASD requirements in section 5.

4.2 Device Identification Requirements

REQ-VGM-ID-01: The VGM shall contain a metal (with a contrasting color from the background) non-removable manufacturer identification tag affixed to a location approved by GCD TSS. The identification tag shall not be hand engraved.

REQ-VGM-ID-02: The manufacturer identification tag shall contain the manufacturer, model number, serial number and date of manufacture. The font used on the identification tag shall differentiate between alpha “O” and numeric “0.”

REQ-VGM-ID-03: The VGMID tag shall be in a location approved by GCD TSS.

4.3 Bill Acceptor Requirements

REQ-VGM-BA-01: The VGM bill acceptor shall utilize a stacker to collect accepted bills.

REQ-VGM-BA-02: The VGM bill acceptor shall be disabled when the bill stacker becomes jammed or full and display an error message.

REQ-VGM-BA-03: The VGM bill acceptor shall not accept any bill larger than $100.

REQ-VGM-BA-04: The VGM bill acceptor shall not accept any bills during game play.

REQ-VGM-BA-05: The VGM bill acceptor may be configured to prohibit certain bill denominations.

4.4 Cash Area Requirements

REQ-VGM-CASH-01: The VGM bill stacker area shall be locked and separate from the logic area.

REQ-VGM-CASH-02: The VGM shall print an Access Ticket when the bill stacker area is accessed. The Access Ticket generated shall contain the string "Cash Accessed."

4.5 Logic Board Area Requirements

REQ-VGM-LOGIC-01: The VGM's logic board area shall be locked and separate from the cash access area.

REQ-VGM-LOGIC-02: The VGM shall print an Access Ticket when the logic area is accessed. The Access Ticket generated shall contain the string "Logic Accessed."

REQ-VGM-LOGIC-03: The VGM shall maintain all data reported on an Audit Ticket for thirty days with no supplied power.

REQ-VGM-LOGIC-04: The VGM shall have its removable storage media easily accessible from the front of the VGM.

REQ-VGM-LOGIC-05: All removable storage media shall contain identification of its version clearly labeled on the physical device.

4.6 Player Awareness Requirements

REQ-VGM-PLAYER-01: The VGM shall display player credits, if tracking in credits, with an appropriate label.

REQ-VGM-PLAYER-02: The VGM shall display player balance, if tracking monetary value, with an appropriate label.

REQ-VGM-PLAYER-03: The VGM shall display player bet as "Bet."

REQ-VGM-PLAYER-04: The VGM shall display win award as "Win" or "Won."

REQ-VGM-PLAYER-05: The automatic cashout amount is displayed either on glass, help screen or main screen, if supported.

REQ-VGM-PLAYER-07: The VGM cabinet or screen shall always display the string "Malfunction Voids All Plays and Pays."

REQ-VGM-PLAYER-08: The VGM's button lights and screen icons shall properly indicate functions that are enabled or disabled.

REQ-VGM-PLAYER-09: The VGM shall not automatically initiate game play while changing or setting bet value.

REQ-VGM-PLAYER-10: The VGM shall reset the bet for a game by any of the following methods: reducing the bet to $0.25 or less, reducing the bet to the minimum possible bet for that game or requiring the player to place a bet before start of a new game. Bet reset shall occur when player credits/cash value reach zero and 3 minutes has elapsed or whenever attract mode is activated. The VGM shall prohibit the attract mode if a credits/cash value balance is present.

REQ-VGM-PLAYER-11: The VGM shall always clearly display a statement that no person under the age of 18 years is allowed to play.

REQ-VGM-PLAYER-12: The VGM shall display any Game Title's paytables without any wager of money, except for displaying last game data per **REQ-VGM-PLAYER-15**.

REQ-VGM-PLAYER-13: The VGM shall display the total number of games played if a cumulative award total is displayed for a series of games.

REQ-VGM-PLAYER-14: The VGM shall display to the player that the Maximum Award has been achieved whenever an award is capped at $800.

REQ-VGM-PLAYER-15: The VGM shall retain the last game's data including any win data until successive game play (changing spots, bet, etc.) is started regardless of power-cycle, automatic cashout, accessing the main menu or help screen. Last game's data is not required to be retained when exiting a Game Title, entering another Game Title and then returning to the original Game Title.

REQ-VGM-PLAYER-16: The VGM shall support help screens for all enabled Game Titles and Bonus Games that are accessible without any player wager. The help screens shall describe how to play games, as well as define all Free Games, Bonus Games and/or Altered Play pay and odd information that is not visible from the main game.

REQ-VGM-PLAYER-17: The VGM shall notify the player of any banked Bonus Games or Free Games.

REQ-VGM-PLAYER-18: When printing a cashout ticket the VGM shall prominently display "Promptly Redeem Your Win Tickets – Tickets Void After 48 hours".

REQ-VGM-PLAYER-19: Game Titles must pay as advertised.

REQ-VGM-PLAYER-20: Recommendations given to the player shall disclose their constraints.

4.7 Mechanical Meter Requirements

REQ-VGM-MECHMETER-01: The disassembly of the mechanical meters shall result in destruction of the meters. Mechanical meters must be non-resettable.

REQ-VGM-MECHMETER-02: The VGM shall recognize mechanical meter disconnect by displaying an error message and halting game play.

REQ-VGM-MECHMETER-03: The mechanical meters shall contain a minimum of 7 digits.

REQ-VGM-MECHMETER-04: The VGM shall contain easily-viewable forward-facing mechanical meters, tracking in dollars, mounted left to right or top to bottom in a locked and readily accessible/viewable location near the front of the VGM and be labeled and in sequential order as follows: $$IN, $$PL, $$WN, $$PD.

4.8 General Requirements

REQ-VGM-GEN-01: The VGM's power switches shall all be internal to the cabinet.

REQ-VGM-GEN-03: The VGM shall not expose players to any physical, electrical or mechanical hazards.

REQ-VGM-GEN-05: The VGM shall only initiate one game per press of the mechanical start button, not counting Free Games/Bonus Games.

REQ-VGM-GEN-06: The VGM's mechanical meters and non-volatile RAM shall retain data when the VGM is power cycled quickly and continuously.

REQ-VGM-GEN-07: The VGM shall retain memory for the current game and all configurable data during power down.

REQ-VGM-GEN-08: The VGM's wires and wire harnesses shall be secured.

REQ-VGM-GEN-09: The VGM's monitor bezel shall fit against the monitor with minimum gap.

REQ-VGM-GEN-10: The VGM shall not display or contain any graphics or images, in whole or in part, that simulate an illegal gambling device or enterprise.

REQ-VGM-GEN-11: The unused space on all the VGM's media shall be zero filled.

REQ-VGM- GEN-12: The automatic cash out shall not affect game play when triggered.

REQ-VGM-GEN-13: The VGM's mechanical and electronic meters and ASD shall be unaffected by exterior static discharge. See Appendix B of this document for the Static Test Procedure.

REQ-VGM-GEN-14: If struts are present in the VGM to assist in the opening of doors or hatches with significant weight, the VGM shall also incorporate an independent safety support used to prevent the unwanted closure of the door or hatch in the event of strut failure.

REQ-VGM-GEN-15: Unattended or auto-play is prohibited except for Free Games or Bonus Games initiated by, or because of, a Trigger Game.

REQ-VGM-GEN-17: Any USB ports available to the player shall not interface in any way with the logic board.

REQ-VGM-GEN-18: The VGM shall always allow a player to cash out after completion of Standard Game Type. Auto-played games are excluded from this requirement. The player may not be allowed to cash out until any triggered Bonus Games are complete.

REQ-VGM-GEN-19: Any display attached to the VGM capable of downloading/uploading external data (promotional, advertising, etc.) must not interface with the Control Program unless approved by the division.

REQ-VGM-GEN-20: A VGM shall prohibit play unless establishment name, city/town/county, VGM serial number and VGMID are configured. All fields should allow entry of 20 characters maximum excepting VGMID which should be fixed at 6. All fields should be editable at all times.

REQ-VGM-GEN-21: The VGM shall always allow a player to exit a Game Title to enter another Game Title. Auto-Played, Bonus Games, or Free games are excluded from this requirement. A player should be able to exit Altered Play games at any time.

4.9 Video Poker Game Title Requirements

REQ-VGM-POKER-01: The video poker Game Title shall have a minimum 80% return at each bet increment. Game Titles containing a progressive or Incrementing Feature shall use Jackpot Base values when computing minimum return.

REQ-VGM-POKER-02: The video poker Game Title shall have a Maximum Award of $800 including any combined award from a Bonus Game(s).

REQ-VGM-POKER-03: The video poker Game Title shall have a maximum bet of $2 per game.

REQ-VGM-POKER-04: The video poker Game Title shall identify all wild cards.

REQ-VGM-POKER-05: The video poker Game Title shall use card images that resemble standard playing cards.

REQ-VGM-POKER-06: The video poker Game Title shall deal cards in order as generated by the RNG.

REQ-VGM-POKER-07: The video poker Game Title shall replace discarded cards in order as generated by the RNG.

REQ-VGM-POKER-08: The video poker Game Titles shall only be draw poker, stud poker, or hold'em as described in Scarne's Encyclopedia of Card Games (Copyright 1983 by John Scarne, pages 18 through 276) and conform to the Standard Game Type as defined in Administrative Rules of Montana 23.16.1802.

REQ-VGM-POKER-09: The electronic and mechanical $$PL and GPLD meters shall be incremented once the cards are dealt and not after the draw.

REQ-VGM-POKER-10: If auto-hold is supported, the VGM shall re-enable auto-hold any time the cards are returned to their original dealt state.

REQ-VGM-POKER-11: The stand function shall not be available on a losing hand.

4.10 Video Keno Game Title Requirements

REQ-VGM-KENO-01: The video keno Game Title shall have a minimum 80% return at each bet increment. Game Titles containing a progressive or Incrementing Feature shall use Jackpot Base values when computing minimum return.

REQ-VGM-KENO-02: The video keno Game Title shall have a Maximum Award of $800 including any combined award from a Bonus Game(s).

REQ-VGM-KENO-03: The video keno Game Title shall have a maximum bet of $2 per game.

REQ-VGM-KENO-04: The video keno Game Title shall use a fixed playing card with numbers from 1–80.

REQ-VGM-KENO-05: The video keno Game Title shall draw numbers in order as generated by the RNG.

REQ-VGM-KENO-06: The video keno Game Title shall accept bets on a minimum of 2 spots marked and a maximum of 10 spots marked. The player shall always be able to pick these numbers.

REQ-VGM-KENO-07: The video keno Game Title shall draw at least 20 numbers and display them on the playing card.

REQ-VGM-KENO-08: The video keno Game Title shall conform to the Standard Game Type as defined in Administrative Rules of Montana 23.16.1802 and be of a variation approved in 23.16.1304.

REQ-VGM-KENO-10: The video keno game shall display the “Bet” amount, the number of “Spots Marked” and the number of “Hits.”

REQ-VGM-KENO-11: If multi-card is supported, the video keno game shall clearly convey the number of cards played.

4.11 Video Bingo Game Title Requirements

REQ-VGM-BINGO-01: The video bingo Game Title shall have a minimum 80% return at each bet increment. Game Titles containing a progressive or Incrementing Feature shall use Jackpot Base values when computing minimum return.

REQ-VGM-BINGO-02: The video bingo Game Title shall have a Maximum Award of $800 including any combined award from a Bonus Game(s).

REQ-VGM-BINGO-03: The video bingo Game Title shall have a maximum bet of $2 per game.

REQ-VGM-BINGO-04: The video bingo Game Title shall draw numbers in order as generated by the RNG.

REQ-VGM-BINGO-05: The video bingo Game Title shall have 24 numbered spaces and one free spot per card.

REQ-VGM-BINGO-06: The video bingo Game Title shall generate card numbers using the RNG or have the cards pre-defined.

REQ-VGM-BINGO-07: The video bingo Game Title shall not have two pre-defined cards that are the same.

REQ-VGM-BINGO-08: The video bingo Game Title shall conform to a Standard Game Type as defined in Administrative Rules of Montana 23.16.1802.

REQ-VGM-BINGO-09: The video bingo game shall display all winning cards including those played by the VGM, if applicable.

REQ-VGM-BINGO-10: The video bingo game shall display the "Bet" amount, the number of "Cards Played," the number of "Spots Marked" and the number of "Hits."

4.12 Bonus Game Requirements

REQ-VGM-BONUS-01: A Bonus Game shall not be of Standard Game Type and not simulate an illegal gambling device or enterprise.

REQ-VGM-BONUS-02: The progression to a Bonus Game shall follow completion of a Standard Game Type.

REQ-VGM-BONUS-03: At each bet increment, for each Game Title, the average return of all Bonus Games shall be less than 50% of the overall return.

REQ-VGM-BONUS-04: The combined Trigger Game and associated Bonus Game awards shall not exceed the Maximum Award, $800.

REQ-VGM-BONUS-05: The play of any Trigger Game and associated Bonus Game(s) shall increase the GPLD and GWON (if applicable) electronic meters by one count. If there is no win in the Trigger Game but there is a win in an associated Bonus Game, GWON should increment.

REQ-VGM-BONUS-06: The Bonus Game shall increment the $$WN electronic and mechanical meters if a win is achieved.

REQ-VGM-BONUS-07: The Bonus Game shall be offered at no risk to the player.

REQ-VGM-BONUS-08: The Bonus Game shall resume properly if interrupted with a power cycle.

REQ-VGM-BONUS-09: The Bonus Game can end immediately once the Maximum Award has been reached and notify the player accordingly. If the Bonus Game only awards credits/cash value, it shall not be played if triggered with a Maximum Award win.

REQ-VGM-BONUS-10: A Bonus Game shall only award multipliers applied to the Trigger Game win, Altered Play, Free Games and credits/cash value.

REQ-VGM-BONUS-11: If a Session at any time includes the possibility for it to illustrate, display or become a Bonus Game it should be treated as a Bonus Game. A Session starts after the conclusion of a Trigger Game and lasts until the start of the next Standard Game Type.

REQ-VGM-BONUS-12: The Bonus Game shall conform as defined in Administrative Rules of Montana 23.16.1802.

4.13 Global Bonus Game Requirements

REQ-VGM-GLOBALBONUS-01: A Global Bonus game shall not be of Standard Game Type and shall not simulate an illegal gambling device or enterprise.

REQ-VGM-GLOBALBONUS-02: The progression to a Global Bonus game shall follow completion of a Standard Game Type.

REQ-VGM-GLOBALBONUS-03: The summation of the combined theoretical return of all Global Bonuses and all combined Bonus Games in individual Game Titles at each bet increment shall be less than 50% of the overall average return for each individual Game Title.

REQ-VGM-GLOBALBONUS-04: The combined Trigger Game and associated Global Bonus awards shall not exceed the Maximum Award, $800.

REQ-VGM-GLOBALBONUS-05: The Global Bonus game shall not increment the GPLD electronic meter. If there is no win in the Trigger Game but there is a win in an associated Global Bonus Game, the GWON electronic meter should increment.

REQ-VGM-GLOBALBONUS-06: The Global Bonus game shall increment the $$WN electronic and mechanical meters if a win is achieved.

REQ-VGM-GLOBALBONUS-07: The Global Bonus game shall have its own 10-digit cents won meter that is incremented with the Global Bonus win amount only and be treated as a separate Game Title for purposes of tracking.

REQ-VGM-GLOBALBONUS-08: The Global Bonus game cannot be disabled by the operator.

REQ-VGM-GLOBALBONUS-09: The Global Bonus game shall resume properly if interrupted with a power cycle.

REQ-VGM-GLOBALBONUS-10: The Global Bonus game can end immediately once the Maximum Award has been reached and notify the player accordingly. If the Global Bonus game only awards credits/cash value, it shall not be played if triggered with a Maximum Award win.

REQ-VGM-GLOBALBONUS-11: A Global Bonus game shall only award multipliers applied to the Trigger Game win, Altered Play, Free Games and credits/cash value.

4.14 Free Game or Altered Play Requirements

REQ-VGM-FREEALTER-01: Game Titles must maintain the same Standard Game Type through Altered Play and/or Free Games.

REQ-VGM-FREEALTER-02: The Free Games shall not increment $$PL electronic and mechanical meters and shall increment $$WN electronic and mechanical meters, and GPLD and GWON electronic meters.

REQ-VGM-FREEALTER-03: The game with Altered Play shall increment the $$PL electronic and mechanical meters, $$WN electronic and mechanical meters, and GPLD and GWON electronic meters.

REQ-VGM-FREEALTER-04: The Altered Play or Free Games shall remain when switching between Game Titles, after cash outs and through power cycles.

REQ-VGM-FREEALTER-05: The Altered Play or Free Games shall not affect awards in the Trigger Game.

REQ-VGM-FREEALTER-06: Free Games that are auto-played must display each game outcome to the player.

REQ-VGM-FREEALTER-07: Free Games that are auto-played can post the accounting data after the last game has been played. Free Games without auto-play must post the accounting at the completion of each game.

REQ-VGM-FREEALTER-08: A random determination of Altered Play, based on pre-defined probability and not allowing player interaction, can be made after a Standard Game Type is initiated and prior to the first draw/spin of that game. The rules for this Altered Play must be defined in the help screen or in-game prior to the initiation of the game.

4.15 RNG Requirements

REQ-VGM-RNG-01: The RNG shall be initialized from a non-deterministic seed.

REQ-VGM-RNG-02: The RNG shall pass the chi-square, runs, serial correlation, and reel to reel tests.

REQ-VGM-RNG-03: The VGM shall implement a communication mechanism to test the RNG. See Appendix C of this document for a sample RNG communication method.

REQ-VGM-RNG-04: The RNG shall cycle at a minimum average rate of 100 Hz (100 times per second).

4.16 Accounting Requirements

REQ-VGM-ACCOUNTING-01: Audit Tickets shall contain the following information in order (or an order approved by the department) using these labels from top to bottom and/or left to right, with any non-required data (except for Period Meters which may appear with the Lifetime Meters) occurring after the information below. Audit Tickets shall be printed through use of an Audit Key and contain the string "Audit Ticket," and both before and after Lifetime Memory Clear:

ESTABLISHMENT: (Name of licensed establishment) (20 characters maximum)
ADDRESS: (Address if applicable)
CITY/COUNTY: (Name of city, town, or county) (20 characters maximum)
VGMID #: (VGMID Decal #) (6 digits)
SERIAL #: (VGM serial number) (20 characters maximum)
TIME: (HH:MM:SS) (24 hr format) "D" or "S" (depending on Standard or Daylight Time)
DATE: (month/day/year)

PROGRAM #: (program name) (6 alphanumeric characters)
**Additional Software Identification(s) (Video, Sound, etc. if applicable)*
**$$12 (total cents in mechanism(s) if applicable) (10 digits) (xxxxxxxx.xx)*
**$$BA (total cents in bill acc. if applicable)) (10 digits) (xxxxxxxx.xx)*
$$IN ($$12 + $$BA) (10 digits) (xxxxxxxx.xx)
$$PL (total cents played) (10 digits) (xxxxxxxx.xx)
$$WN (total cents won) (10 digits) (xxxxxxxx.xx)
$$PD (total cents paid) (10 digits) (xxxxxxxx.xx)
$$CR (current credits) (10 digits) (xxxxxxxx.xx)
GPLD (total games played) (8 digits)
GWON (total games won) (8 digits)
Multi-Game Meters (if applicable, see Section 4.18)
**Individual Progressive Meters (Jackpot Name,* $$JP, $$ES, $$BS, $$PD and $$MX) *(if applicable, see Section 4.19)*
**Incrementing Feature Meters (IF and IFES) (if applicable, see Section 4. 19)*
**Progressive Jackpot Logs (Time hr:min, Date, Jackpot Name,* $$AM, $$JP, $$ES and $$PD*) (if applicable, see Section 4.19)*
**$$IN (electronic hard meter) (7+ digits) (xxxxxxx)*
**$$PL (electronic hard meter) (7+ digits) (xxxxxxx)*
**$$WN (electronic hard meter) (7+ digits) (xxxxxxx)*
**$$PD (electronic hard meter) (7+ digits) (xxxxxxx)*
**"Master" or "Slave" and Programmable ID (if configured for Linked VGM)*
**Any Non-Required Data*

Access Tickets shall contain the following information in order(or an order approved by the department) using these labels from top to bottom and/or left to right, with any non-required data (except for Period Meters which may appear with the Lifetime Meters) occurring after the information below. Access Tickets shall be printed when cash or logic areas are accessed:

ESTABLISHMENT: (Name of licensed establishment) (20 characters maximum)
ADDRESS: (Address if applicable)
CITY/COUNTY: (Name of city, town, or county) (20 characters maximum)
VGMID #: (VGMID Decal #) (6 digits)
SERIAL #: (VGM serial number) (20 characters maximum)
TIME: (HH:MM:SS) (24 hr format) "D" or "S" (depending on Standard or Daylight Time)
DATE: (month/day/year)
PROGRAM #: (program name) (6 alphanumeric characters)
**Additional Software Identification(s) (Video, Sound, etc. if applicable)*
**$$12 (total cents in mechanism(s) if applicable) (10 digits) (xxxxxxxx.xx)*
**$$BA (total cents in bill acc. if applicable)) (10 digits) (xxxxxxxx.xx)*
$$IN ($$12 + $$BA) (10 digits) (xxxxxxxx.xx)
$$PL (total cents played) (10 digits) (xxxxxxxx.xx)
$$WN (total cents won) (10 digits) (xxxxxxxx.xx)
$$PD (total cents paid) (10 digits) (xxxxxxxx.xx)
$$CR (current credits) (10 digits) (xxxxxxxx.xx)
GPLD (total games played) (8 digits)
GWON (total games won) (8 digits)
**$$IN (electronic hard meter) (7+ digits) (xxxxxxx)*
**$$PL (electronic hard meter) (7+ digits) (xxxxxxx)*
**$$WN (electronic hard meter) (7+ digits) (xxxxxxx)*
**$$PD (electronic hard meter) (7+ digits) (xxxxxxx)*
**"Master" or "Slave" and Programmable ID (if configured for Linked VGM)*
**Any Non-Required Data*

REQ-VGM-ACCOUNTING-02: The "*PROGRAM #*" (Program Name) reported on all tickets shall be identical to Paytable ID that is reported in SAS which is 6 alphanumeric characters in length.

REQ-VGM-ACCOUNTING-03: All 10-digit electronic meters ($XXXXXXXX.XX) must be capable of incrementing to a minimum of 32-bit unsigned maximum value (0xFFFFFFFF hex or 42,949,672.95 decimal) and non-programmable. Meters should rollover after reaching their maximum value. Using minimum values for example, if the current value on $$PL meter is $42,949,672.99 and $0.01 is played, $$PL should roll to $00,000,000.01.

REQ-VGM-ACCOUNTING-04: If Period Meters are printed on the Audit Ticket then they shall be labeled with "Period" and the Lifetime Meters will be labeled with "Lifetime."

REQ-VGM-ACCOUNTING-05: The VGM shall have the ability to display all electronic meters, including progressive and Incrementing Feature meters, from the Operators' Menu.

REQ-VGM-ACCOUNTING-06: The VGM shall correctly adjust for leap years.

REQ-VGM-ACCOUNTING-07: The VGM shall support a Lifetime Memory Clear procedure by use of the Audit Key and no external hardware. The Lifetime Memory Clear procedure must retain the establishment, city, time, date, serial number, VGMID, program name, SAS Validation Type, SAS address and all history recall data. Audit Tickets shall be printed when a Lifetime Memory Clear operation is successful and contain the strings "Before Lifetime Memory Clear" and "After Lifetime Memory Clear" respectively. The VGM shall prohibit a Lifetime Memory Clear operation if a credits/cash value balance is present.

REQ-VGM-ACCOUNTING-08: The VGM shall zero the electronic escrow meters that track cents for mechanical meter indexing when a Lifetime Memory Clear operation is performed.

REQ-VGM-ACCOUNTING-09: The VGM shall support a mechanism to print an Audit Ticket labeled as "Audit Ticket" by use of the Audit Key.

REQ-VGM-ACCOUNTING-10: The VGM shall automatically adjust for daylight savings time. A "D" after the time shall denote daylight savings time and an "S" shall denote standard time. Refer to the Naval website for when daylight savings time begins and ends.

REQ-VGM-ACCOUNTING-11: The VGM shall support a Master Reset used to restore corrupted memory or upgrade software and it shall be independent of the game software and no Audit Tickets are required.

REQ-VGM-ACCOUNTING-12: Electronic meters shall balance using the formula:
$$IN + $$WN - $$PL = $$PD

REQ-VGM-ACCOUNTING-13: If the VGM does not require a Master Reset for software upgrade, it shall print an Audit Ticket after new program install and contain the string "Audit Ticket."

REQ-VGM-ACCOUNTING-14: The VGM shall not allow runtime selection of ASD support.

REQ-VGM-ACCOUNTING-15: The VGM's clock shall not be affected by any operation and continue to keep accurate time while powered off.

REQ-VGM-ACCOUNTING-16: The VGM shall post any accounting change immediately.

REQ-VGM-ACCOUNTING-17: The VGM shall retain the date and time when a Master Reset occurs.

4.17 Cash Ticket Requirements

REQ-VGM-CASHTICKET-01: The cashout ticket shall contain the information below, in order (or an order approved by the department) from top to bottom and/or left to right. Non-required data should be printed after the required information. The ticket needs to be formatted depending on the printer type.

Impact printer and thermal printer without fan fold paper (labels are allowed if desired)

(Name of licensed establishment) (20 characters maximum)
(Address, if applicable)
(Name of city, town, or county) (20 characters maximum)
Title
Validation Number Bar Code (Interleaved 2 of 5 format, representing the SAS validation number (subject to printer limitations, truncate MS, where applicable))
SAS Validation Number
VGMID # (VGMID Decal #) (6 digits)
SERIAL # (VGM serial number) (20 characters maximum)
TIME (HH:MM:SS) (24 hr format) D or S (depending on Standard or Daylight Time)
DATE (month/day/year)
PROGRAM # (program name) (6 alphanumeric characters)
(cashout ticket value in numerals)
(cashout ticket value in words)
(sequence ticket number) (resets only when lifetime meters are cleared or reaching the 3+ digit minimum)
"Ticket Void After 48 hours"

Thermal printer with fan fold paper (See GSA SAS 6 Frequently Asked Questions Appendix A where applicable for specifications and labels.)

(name of licensed establishment) (20 characters maximum)
(Address, if applicable)
(name of city, town, or county) (20 characters maximum)
Title
Validation Number Bar Code (Interleaved 2 of 5 format)
SAS Validation Number
PROGRAM # (program name) (6 alphanumeric characters)
SERIAL # (VGM serial number) (20 characters maximum)
DATE (month/day/year)
TIME (HH:MM:SS) (24 hr format) D or S (depending on Standard or Daylight Time)
(sequence ticket number) (resets only when lifetime meters are cleared or reaching the 3+ digit minimum)
(cashout ticket value in words)
(cashout ticket value in numerals)
"Ticket Void After 48 hours"
VGMID # (VGMID Decal #) (6 digits)

REQ-VGM-CASHTICKET-02: The cashout ticket shall print immediately upon initiating a cash out and not after the credits/cash value are mechanically accounted for or any other delay.

REQ-VGM-CASHTICKET-03: The cashout ticket shall be printed for any player credits/cash value amount.

REQ-VGM-CASHTICKET-04: The cashout ticket sequence number shall be cleared if a Lifetime Memory Clear is performed.

4.18 Multi-Denomination & Multi-Game Requirements

REQ-VGM-MULTI-01: The VGM shall, at a minimum, have electronic 10-digit cents played and cents won meters ($$PL and $$WN) for each Game Title and Global Bonus.

REQ-VGM-MULTI-02: The VGM shall include game-specific meters on Audit Tickets with labels indicating each unique Game Title, regardless of whether the Game Title is enabled/disabled in the Operators' Menu. If a Master Reset is required to enable Game Titles they do not need to be tracked while disabled.

REQ-VGM-MULTI-03: The VGM shall notify the player of any remaining credits/cash value when the lowest denomination of a game exceeds the remaining amount in the player's bank.

REQ-VGM-MULTI-04: The VGM shall disable help for a Game Title if it is disabled.

REQ-VGM-MULTI-05: A multi-game VGM must always have two of the Standard Game Types enabled.

REQ-VGM-MULTI-06: The VGM shall support a process to disable any Game Title without requiring a Master Reset.

4.19 Progressive and Incrementing Features Requirements

REQ-VGM-PROGRESSIVE-01: The VGM shall have electronic 10-digit "Jackpot," "Escrow," "Lifetime Jackpot Paid," "Jackpot Base" and "Maximum Jackpot" meters for each progressive jackpot. These shall be labeled $$JP, $$ES, $$PD, $$BS and $$MX respectively. Progressive meters shall be input in increments of the lowest denomination supported by their corresponding Game Title. Jackpot and Escrow meters shall be programmable from the Operators' Menu. See Appendix A of this document for definitions of progressive terms.

REQ-VGM-PROGRESSIVE-02: The Escrow meter shall increment when the total Jackpot amount has increased past its Maximum Jackpot value. Escrow shall also decrement after the Jackpot has been won, adding to the Player Contribution amount in the Jackpot electronic meter.

REQ-VGM-PROGRESSIVE-03: The Jackpot and Escrow meters and progressive jackpot logs may be cleared when a Lifetime Memory Clear operation is performed.

REQ-VGM-PROGRESSIVE-04: Audit Tickets shall include progressive and Incrementing Feature meters for all Game Titles, as well as a section for Jackpot logs. Each individual progressive Game Title shall list $$JP, $$ES, $$PD, $$BS and $$MX. Each individual Incrementing Feature shall list each "IF" and "IFES" meter. The progressive Jackpot logs shall contain the time (HH:MM:SS 24 hr format), date, distinct jackpot name and $$AM, Before $$JP, After $$JP, Before $$ES, After $$ES, $$PD, $$BS, and $$MX meters from each distinct

progressive jackpot awarded. The VGM shall print a minimum of five logs for the most recent progressive Jackpot awarded.

REQ-VGM-PROGRESSIVE-05: Jackpot Alter Tickets shall contain the following information in order using these labels from top to bottom and/or left to right, with any non-required data occurring after the information below. Jackpot Alter Tickets shall be printed whenever $JP, $$ES, $$BS or $$MX meters or Incrementing Feature "IF" or "IFES" are modified from the Operators' Menu and contain the strings "Before Jackpot Alter" and "After Jackpot Alter." These tickets coincide with the Before Jackpot Alter and After Jackpot Alter entries noted in **REQ-ASD-DATA-LOG-4**:

ESTABLISHMENT: (Name of licensed establishment) (20 characters maximum)
ADDRESS: (Address if applicable)
CITY/COUNTY: (Name of city, town, or county) (20 characters maximum)
VGMID #: (VGMID Decal #) (6 digits)
SERIAL #: (VGM serial number) (20 characters maximum)
TIME: (HH:MM:SS) (24 hr format) "D" or "S" (depending on Standard or Daylight Time)
DATE: (month/day/year)
PROGRAM #: (program name) (6 alphanumeric characters)
**Additional Software Identification(s) (Video, Sound, etc. if applicable)*
Individual Progressive Meters (Jackpot Name, $$JP, $$ES, $$BS, $$PD and $$MX)
Individual Incrementing Feature Meters (IF, IFES)
**Any Non-Required Data*

REQ-VGM-PROGRESSIVE-06: The progressive Jackpot Base shall have a minimum value that it cannot be adjusted below.

REQ-VGM-PROGRESSIVE-07: The VGM shall not display progressive information in the help screen if that particular progressive jackpot is not available to the player.

REQ-VGM-PROGRESSIVE-08: The VGM shall not allow a progressive Escrow meter to be set or changed unless the Jackpot meter is at the Maximum Jackpot.

REQ-VGM-PROGRESSIVE-09: The VGM shall not allow the progressive contribution percentage or any other progressive or Incrementing Feature growth related parameter to be adjusted by the operator.

REQ-VGM-PROGRESSIVE-10: If the entire progressive Jackpot amount cannot be awarded due to a combination with another win (paytable pay, Bonus Game, etc.) which reaches the Maximum Award for a game, the Jackpot Base and any Other Wins shall be awarded before deducting from the Player Contribution amount. The VGM shall use the following algorithm in calculating the new value of the progressive Jackpot: if the Jackpot Base plus any Other Wins are less than the Maximum Win, then the new progressive Jackpot will be the previous progressive Jackpot amount minus the smaller of either of the following: the amount contributed to the progressive by the player, or the Maximum Win minus the Other Wins and the Jackpot Base. Otherwise, the new progressive Jackpot will be equal to the previous progressive Jackpot amount. Below is the same algorithm in pseudocode:

```
// award from Jackpot Base and Other Wins before player contribution
if (Jackpot Base + Other_Wins < Maximum_Award)
{
    // calculate how much player has added to the jackpot through game play
    Player Contribution = previous_jackpot - Jackpot Base;
```

```
        // calculate amount of Player Contribution that can be awarded and reduce it accordingly
        new_jackpot = previous_jackpot - min(Player Contribution, Maximum Award - Other_Wins -
                      Jackpot Base);
    }
    else
    {
        // only the Jackpot Base and Other Wins could be awarded, so Player Contribution remains
        new_jackpot = previous_jackpot;
    }
```

REQ-VGM-PROGRESSIVE-11: The VGM shall have programmable electronic meters of appropriate length labeled starting with "IF," and if applicable "IFES," and having a descriptive name for each individual Incrementing Feature value and its respective escrow amount. For example, the Game Title "GCDkeno" has two Incrementing Feature values with Escrow possibility "IFGCDkenoMajor," "IFGCDkenoMinor," "IFESGCDkenoMajor" and "IFESGCDkenoMinor."

REQ-VGM-PROGRESSIVE-12: The "IFES" Escrow meter shall increment when the total "IF" amount has incremented past its maximum value. "IFES" shall also decrement after the "IF" has been won, adding to the amount in the "IF" electronic meter.

REQ-VGM-PROGRESSIVE-13: The "IF" and "IFES" meters may be cleared when a Lifetime Memory Clear operation is performed.

REQ-VGM-PROGRESSIVE-14: Initial values (following software installation or Master Reset) for any Incrementing Feature meter must be non-random.

4.20 Linked VGM Requirements

REQ-VGM-LINKVGM-01: VGMs linked together for shared progressives and/or Incrementing Features shall use a master/slave model of communication.

REQ-VGM-LINKVGM-02: The master VGM shall store all progressive Jackpots, Escrows, Jackpot Base, Maximum Jackpot, Incrementing Feature and Incrementing Feature Escrow amounts/values.

REQ-VGM-LINKVGM-03: Any slave VGM's linked Game Title shall become disabled if communication is lost with the master VGM and allow cash out of all player credits/cash value.

REQ-VGM-LINKVGM-04: The master VGM shall uniquely identify each slave VGM using a programmable ID set from the Operators' Menu of the slave VGM.

REQ-VGM-LINKVGM-05: All linked VGMs shall report a link error if 2 or more master VGMs are in the same link.

REQ-VGM-LINKVGM-06: All linked VGMs shall report a link error if 2 or more slaves VGMs have the same ID.

REQ-VGM-LINKVGM-07: All slave VGMs shall not allow the adjustment of progressive Jackpots, Escrows, Jackpot Base, Maximum Jackpot, Incrementing Feature and Incrementing Feature Escrow amounts/values.

REQ-VGM-LINKVGM-08: The Jackpot logs shall be recorded on the VGM in which the Jackpot was awarded.

REQ-VGM-LINKVGM-09: The master VGM shall display the word "master" on the game selection menu if it is connected to and communicating with one or more slaves. The VGM shall not display the word "master" if no slaves are connected even if the VGM is configured to be master.

REQ-VGM-LINKVGM-10: The master VGM shall display the word "master" on Access and Audit Tickets. The slave VGM(s) shall display the word "slave" and their programmable id on Access and Audit Tickets.

4.21 SAS Requirements

REQ-VGM-SAS-01: The VGM shall incorporate a female (no pins) RS232 DB9 connector implementing the standard pin out as defined by the EIA-232 standard. The cable, if applicable, shall be of sufficient length to easily reach the appropriate system interface board mounting regardless of the orientation of the interface board.

REQ-VGM-SAS-02: The VGM shall implement SAS the Logical Interface, including Wakeup Mode, as defined in the GSA SAS Protocol Version 6.00 or later.

REQ-VGM-SAS-03: The VGM shall implement the SAS Gaming Machine Addressing as defined in the GSA SAS Protocol Version 6.00 or later. The VGM shall support an attendant configurable address with a range of 1 to 127, this value should be editable at all times. An address of 0 may also be supported but is not required. When configured with an address of 0, the VGM shall ignore all communications from the host.

REQ-VGM-SAS-04: The VGM shall implement SAS timing requirements for Gaming Machine Response Time as defined in the GSA SAS Protocol Version 6.00 or later. An automated timing test tool can be provided from the GCD upon request.

REQ-VGM-SAS-05: The VGM shall implement SAS timing requirements for Inter-Byte Delay Time as defined in the GSA SAS Protocol Version 6.00 or later. An automated timing test tool can be provided from the GCD upon request.

REQ-VGM-SAS-06: The VGM shall support SAS error condition Loop Break Indication as defined in the GSA SAS Protocol Version 6.00 or later.

REQ-VGM-SAS-07: If SAS is activated at any time, default the VGM to Standard validation mode and prompt operator to select the SAS address.

REQ-VGM-SAS-08: If SAS is activated at any time, the VGM shall support selecting between Standard Validation or Secure Enhanced via an Operators' Menu with no need for a SAS host or a Master Reset.

REQ-VGM-SAS-09: The VGM shall halt and prevent game play if it is configured to Secure Enhanced with no Validation ID configured from the host.

REQ-VGM-SAS-10: The VGM shall halt and prevent game play when it is configured to Secure Enhanced and the validation buffer becomes full of unread records. The VGM shall continue game play if a link down condition occurs and the validation buffer is not full. The VGM shall never go into a hand pay state.

REQ-VGM-SAS-11: All VGM-reported electronic meters shall balance using the formula:

$$IN + $$WN = $$PL + $$PD + $$CR

An automated meter test tool can be provided from the GCD upon request.

REQ-VGM-SAS-12: Upon a Master Reset VGM shall prompt for SAS configuration.

4.22 SAS General Poll Exception Requirements

REQ-VGM-SASEXCEPTION-01: The VGM shall implement SAS general poll exception FIFO and priority as defined in the GSA SAS Protocol Version 6.00 or later.

REQ-VGM-SASEXCEPTION-02: The VGM shall support SAS general poll exception 00 (No Activity) as defined in the GSA SAS Protocol Version 6.00 or later.

REQ-VGM-SASEXCEPTION-03: The VGM shall support SAS general poll exception 11 (Slot Door Opened) as defined in the GSA SAS Protocol Version 6.00 or later. This exception is specified as "Main Area Door Opened" for Montana implementation.

REQ-VGM-SASEXCEPTION-04: The VGM shall support SAS general poll exception 12 (Slot Door Closed) as defined in the GSA SAS Protocol Version 6.00 or later. This exception is specified as "Main Area Door Closed" for Montana implementation.

REQ-VGM-SASEXCEPTION-05: The VGM shall support SAS general poll exception 13 (Drop Door Opened) as defined in the GSA SAS Protocol Version 6.00 or later.

REQ-VGM-SASEXCEPTION-06: The VGM shall support SAS general poll exception 14 (Drop Door Closed) as defined in the GSA SAS Protocol Version 6.00 or later.

REQ-VGM-SASEXCEPTION-07: The VGM shall support SAS general poll exception 15 (Card Cage Opened) as defined in the GSA SAS Protocol Version 6.00 or later. This exception is specified as "Logic Door Opened" for Montana implementation.

REQ-VGM-SASEXCEPTION-08: The VGM shall support SAS general poll exception 16 (Card Cage Closed) as defined in the GSA SAS Protocol Version 6.00 or later. This exception is specified as "Logic Door Closed" for Montana implementation.

REQ-VGM-SASEXCEPTION-09: The VGM shall support SAS general poll exception 17 (AC Power Applied) as defined in the GSA SAS Protocol Version 6.00 or later.

REQ-VGM-SASEXCEPTION-10: The VGM shall support SAS general poll exception 18 (AC Power Lost) as defined in the GSA SAS Protocol Version 6.00 or later.

REQ-VGM-SASEXCEPTION-11: The VGM shall support SAS general poll exception 19 (Cashbox Door Opened) as defined in the GSA SAS Protocol Version 6.00 or later. This exception is specified as "Cash Access Opened" for Montana implementation.

REQ-VGM-SASEXCEPTION-12: The VGM shall support SAS general poll exception 1A (Cashbox Door Closed) as defined in the GSA SAS Protocol Version 6.00 or later. This exception is specified as "Cash Access Closed" for Montana implementation.

REQ-VGM-SASEXCEPTION-13: The VGM shall support SAS general poll exception 1B (Cashbox Removed) as defined in the GSA SAS Protocol Version 6.00 or later.

REQ-VGM-SASEXCEPTION-14: The VGM shall support SAS general poll exception 1C (Cashbox Installed) as defined in the GSA SAS Protocol Version 6.00 or later.

REQ-VGM-SASEXCEPTION-15: The VGM shall support SAS general poll exception 1D (Belly Door Opened) as defined in the GSA SAS Protocol Version 6.00 or later.

REQ-VGM-SASEXCEPTION-16: The VGM shall support SAS general poll exception 1E (Belly Door Closed) as defined in the GSA SAS Protocol Version 6.00 or later.

REQ-VGM-SASEXCEPTION-17: The VGM shall support SAS general poll exception 27 (Cash Box Full) as defined in the GSA SAS Protocol Version 6.00 or later.

REQ-VGM-SASEXCEPTION-18: The VGM shall support SAS general poll exception 28 (Bill Jam) as defined in the GSA SAS Protocol Version 6.00 or later.

REQ-VGM-SASEXCEPTION-19: The VGM shall support SAS general poll exception 29 (Bill Acceptor Hardware Failure) as defined in the GSA SAS Protocol Version 6.00 or later.

REQ-VGM-SASEXCEPTION-20: The VGM shall support SAS general poll exception 2B (Bill Rejected) as defined in the GSA SAS Protocol Version 6.00 or later.

REQ-VGM-SASEXCEPTION-21: The VGM shall support SAS general poll exception 3C (Operator Changed Options) as defined in the GSA SAS Protocol Version 6.00 or later. This exception shall be sent whenever an operator changes configuration options. That includes denomination, gaming machine address or any option that affects the response to long polls 1F (Send Gaming Machine ID and Information), 53 (Send Game N Configuration), 54 (Send SAS Version ID and Gaming Machine Serial Number), 56 (Send Enabled Game Numbers) and A0 (Send Enabled Features).

REQ-VGM-SASEXCEPTION-22: The VGM shall support SAS general poll exception 3D (Cash Out Ticket Printed) as defined in the GSA SAS Protocol Version 6.00 or later.

REQ-VGM-SASEXCEPTION-23: The VGM shall support SAS general poll exception 3F (Validation ID Not Configured) as defined in the GSA SAS Protocol Version 6.00 or later. This exception is of type "Priority" and shall be placed at the head of the exception queue when it occurs. See *REQ-VGM-SAS-09* for VGM behavior requirements while this exception is being reported.

REQ-VGM-SASEXCEPTION-24: The VGM shall support SAS general poll exception 47 ($1.00 Bill Accepted) as defined in the GSA SAS Protocol Version 6.00 or later.

REQ-VGM-SASEXCEPTION-25: The VGM shall support SAS general poll exception 48 ($5.00 Bill Accepted) as defined in the GSA SAS Protocol Version 6.00 or later.

REQ-VGM-SASEXCEPTION-26: The VGM shall support SAS general poll exception 49 ($10.00 Bill Accepted) as defined in the GSA SAS Protocol Version 6.00 or later.

REQ-VGM-SASEXCEPTION-27: The VGM shall support SAS general poll exception 4A ($20.00 Bill Accepted) as defined in the GSA SAS Protocol Version 6.00 or later.

REQ-VGM-SASEXCEPTION-28: The VGM shall support SAS general poll exception 60 (Printer Communication Error) as defined in the GSA SAS Protocol Version 6.00 or later.

REQ-VGM-SASEXCEPTION-29: The VGM shall support SAS general poll exception 61 (Printer Paper Out Error) as defined in the GSA SAS Protocol Version 6.00 or later.

REQ-VGM-SASEXCEPTION-30: The VGM shall support SAS general poll exception 70 (Exception Buffer Overflow) as defined in the GSA SAS Protocol Version 6.00 or later. This exception is of type "Priority" and should be reported at the next opportunity.

REQ-VGM-SASEXCEPTION-32: The VGM shall support SAS general poll exception 86 (Gaming Machine is Out of Service) as defined in the GSA SAS Protocol Version 6.00 or later.

REQ-VGM-SASEXCEPTION-33: The VGM shall support SAS general poll exception 8C (Game Selected) as defined in the GSA SAS Protocol Version 6.00 or later.

REQ-VGM-SASEXCEPTION-34: The VGM shall purposefully not support SAS general poll exceptions 7E and 7F (Game Start and Game End) as defined in the GSA SAS Protocol Version 6.00 or later.

REQ-VGM-SASEXCEPTION-35: The VGM shall support SAS general poll exception 4B ($50.00 Bill Accepted) as defined in the GSA SAS Protocol Version 6.00 or later.

REQ-VGM-SASEXCEPTION-36: The VGM shall support SAS general poll exception 4C ($100.00 Bill Accepted) as defined in the GSA SAS Protocol Version 6.00 or later.

4.23 SAS Long Poll Command Requirements

REQ-VGM-SASLONGPOLL-01: The VGM shall support SAS long poll 21 (ROM Signature Verification) as defined in the GSA SAS Protocol Version 6.00 or later. The VGM shall include all Control Program components in its CRC calculation for SAS long poll 21 including the BIOS, extended BIOS, MBR, OS partitions, game partitions, and paytables. If a chain of trust is used in the boot process of the VGM, the calculation may be performed on the start of the chain that contains the next link's signature omitting the rest of the boot chain from the CRC calculation. This process should complete within 30 minutes. Graphics may be omitted from the CRC calculation.

REQ-VGM-SASLONGPOLL-02: The VGM shall support SAS long poll 0F (Send Meters 10 through 15) as defined in the GSA SAS Protocol Version 6.00 or later. See Appendix D of this document for the Meter Cross Reference table. The Total Jackpot meter is defined as "the cumulative sum of all credits paid by an attendant, as a result of winning wagers and awards from an external bonusing system" and shall always have a zero value for MT.

REQ-VGM-SASLONGPOLL-12: The VGM shall support SAS long poll 1A (Send Current Credits Meter) as defined in the GSA SAS Protocol Version 6.00 or later. One credit is defined as 1 cent for Montana implementation.

REQ-VGM-SASLONGPOLL-13: The VGM shall support SAS long poll 1E (Send Total Bill Meters) as defined in the GSA SAS Protocol Version 6.00 or later.

REQ-VGM-SASLONGPOLL-14: The VGM shall support SAS long poll 1F (Send Gaming Machine ID and Information) as defined in the GSA SAS Protocol Version 6.00 or later.

REQ-VGM-SASLONGPOLL-15: The VGM shall support SAS long poll 20 (Send Total Dollar Value of Bills Meter) as defined in the GSA SAS Protocol Version 6.00 or later.

REQ-VGM-SASLONGPOLL-16: The VGM shall support SAS long poll 31 (Send $1.00 Bills In Meter) as defined in the GSA SAS Protocol Version 6.00 or later.

REQ-VGM-SASLONGPOLL-17: The VGM shall support SAS long poll 32 (Send $2.00 Bills In Meter) as defined in the GSA SAS Protocol Version 6.00 or later.

REQ-VGM-SASLONGPOLL-18: The VGM shall support SAS long poll 33 (Send $5.00 Bills In Meter) as defined in the GSA SAS Protocol Version 6.00 or later.

REQ-VGM-SASLONGPOLL-19: The VGM shall support SAS long poll 34 (Send $10.00 Bills In Meter) as defined in the GSA SAS Protocol Version 6.00 or later.

REQ-VGM-SASLONGPOLL-20: The VGM shall support SAS long poll 35 (Send $20.00 Bills In Meter) as defined in the GSA SAS Protocol Version 6.00 or later.

REQ-VGM-SASLONGPOLL-21: The VGM shall support SAS long poll 36 (Send $50.00 Bills In Meter) as defined in the GSA SAS Protocol Version 6.00 or later.

REQ-VGM-SASLONGPOLL-22: The VGM shall support SAS long poll 37 (Send $100.00 Bills In Meter) as defined in the GSA SAS Protocol Version 6.00 or later.

REQ-VGM-SASLONGPOLL-23: The VGM shall support SAS long poll 46 (Send Credit Amount of All Bills Accepted) as defined in the GSA SAS Protocol Version 6.00 or later. One credit is defined as $.01 for Montana implementation.

REQ-VGM-SASLONGPOLL-24: The VGM shall support SAS long poll 48 (Send Last Accepted Bill Information) as defined in the GSA SAS Protocol Version 6.00 or later.

REQ-VGM-SASLONGPOLL-25: The VGM shall support SAS long poll 54 (Send SAS Version ID and Gaming Machine Serial Number) as defined in the GSA SAS Protocol Version 6.00 or later.

REQ-VGM-SASLONGPOLL-26: The VGM shall support SAS long poll 7E (Send Current Date and Time) as defined in the GSA SAS Protocol Version 6.00 or later.

REQ-VGM-SASLONGPOLL-27: The VGM shall support SAS long poll A0 (Send Enabled Features) as defined in the GSA SAS Protocol Version 6.00 or later.

REQ-VGM-SASLONGPOLL-28: The VGM shall support SAS long poll 2F (Send Selected Meters for Game N) as defined in the GSA SAS Protocol Version 6.00 or later for meters 00 (Total Coin In Credits) and 01 (Total Coin Out Credits). See Appendix D of this document for the Meter Cross Reference table.

REQ-VGM-SASLONGPOLL-29: The VGM shall support SAS long poll 51 (Send Total Number of Games Implemented) as defined in the GSA SAS Protocol Version 6.00 or later. The VGM shall include Global Bonus games in this total games count if they exist. If a Master Reset is required to enable/disable Game Titles they do not need to be tracked while disabled.

REQ-VGM-SASLONGPOLL-30: The VGM shall support SAS long poll 52 (Send Game N Meters) as defined in the GSA SAS Protocol Version 6.00 or later. See Appendix D of this

document for the Meter Cross Reference table. The Total Jackpot meter is defined as "the cumulative sum of all credits paid by an attendant, as a result of winning wagers and awards from an external bonusing system" and shall always have a zero value for MT.

REQ-VGM-SASLONGPOLL-31: The VGM shall support SAS long poll 53 (Send Game N Configuration) as defined in the GSA SAS Protocol Version 6.00 or later.

REQ-VGM-SASLONGPOLL-32: The VGM shall support SAS long poll 55 (Send Selected Game Number) as defined in the GSA SAS Protocol Version 6.00 or later. The VGM shall give Global Bonus games a unique ID number if they exist.

REQ-VGM-SASLONGPOLL-33: The VGM shall support SAS long poll 56 (Send Enabled Game Numbers) as defined in the GSA SAS Protocol Version 6.00 or later. The VGM shall give Global Bonus games a unique ID number if they exist.

REQ-VGM-SASLONGPOLL-34: The VGM shall support SAS long poll 4C (Set Enhanced Validation ID) as defined in the GSA SAS Protocol Version 6.00 or later.

REQ-VGM-SASLONGPOLL-35: The VGM shall support SAS long poll 4D (Send Enhanced Validation Information) as defined in the GSA SAS Protocol Version 6.00 or later for Validation Type "00" (Cashable Ticket). The response Sequential ticket number (Byte 25-26) shall be reported in binary format with the LSB in Byte 25 per the GSA SAS Protocol Version 6.00 or later. For example, if ticket "0009" was printed the response to 4D would contain "0900" since LSB comes first with binary format.

REQ-VGM-SASLONGPOLL-36: The VGM shall support SAS long poll 3D (Send Cash Out Ticket Information) as defined in the GSA SAS Protocol Version 6.00 or later. The VGM shall only report the least significant 4 bytes if the standard validation number calculated by the VGM is larger than 4 bytes in size.

REQ-VGM-SASLONGPOLL-37: The VGM shall support SAS long poll 50 (Send Validation Meters) as defined in the GSA SAS Protocol Version 6.00 or later for Validation Type "00" (Cashable Ticket).

REQ-VGM-SASLONGPOLL-38: The VGM shall support SAS long poll 6F (Send Extended Meters) as defined in the GSA SAS Protocol Version 6.00 or later. See Appendix D of this document for the Meter Cross Reference table. All required meters must support a minimum length of 5 BCD.

REQ-VGM-SASLONGPOLL-39 The VGM shall support SAS long poll 7B (Extended Validation Status) as defined in the GSA SAS Protocol Version 6.00 or later. See Appendix D of this document for the VGMID Cross Reference table.

REQ-VGM-SASLONGPOLL-40 The VGM shall support long poll 7F (Receive Date and Time) as defined in the GSA SAS Protocol Version 6.00 or later.

REQ-VGM-SASLONGPOLL-41 The VGM shall purposely ignore and remain unresponsive to some long polls as defined in the GSA SAS Protocol Version 6.00 or later. See Appendix E of this document for prohibited long polls.

4.24 Source Code Requirements

REQ-VGM-SOURCE-01: The VGM's source code shall produce the exact same binary image every time it is built regardless of the build machine, location, time, etc. Minor differences may be permitted but all differences must be fully documented and externally verifiable. This requirement should be a deciding factor when choosing the OS platform and/or build environment. The TSS Lab needs the ability to build the VGM production image from source and match it to the submitted binary to ensure the correct source was analyzed and archived.

REQ-VGM-SOURCE-02: The VGM's source code shall not contain source that is not compiled into the production image. Examples of this would be source code used for test purposes only, source used in other jurisdictions or new features that are not yet enabled.

REQ-VGM-SOURCE-03: The VGM's source code shall not contain files that are named the same but have different case in the same directory. This causes problems during source analysis on case insensitive platforms like Windows.

REQ-VGM-SOURCE-04: The VGM's source code shall not contain version specific strings in the file or directory names. This causes issues during the comparison of two versions of source code.

REQ-VGM-SOURCE-05: The VGM's source code build environment shall be reproducible and documented.

REQ-VGM-SOURCE-06: The VGM shall support emulation capability that allows forcing all draws, stops and features for each Game Title easily and repeatedly. If software emulation is supported in the production software, the VGM shall require a separate piece of hardware (EPROM, CF, etc.) that enables the emulation functionality for security purposes.

REQ-VGM-SOURCE-07: The VGM shall implement a chain of trust in the boot process where the BIOS that reside on a Programmable Read-Only Memory device is the chain anchor. The chain is established by validating each component of hardware and software fully, including blank space, from the bottom up before execution control is given to that component. This validation should include ALL BIOS. A typical chain of trust may start with a BIOS that contains the signature of a Compact Flash card the VGM control software resides on. The BIOS validates the signature of the Compact Flash card before handing execution control to it and booting the VGM. If an error occurs, the VGM is halted.

4.25 Video Line Game Title Requirements

REQ-VGM-LINE-01: The video line Game Title shall have a minimum 80% return at each bet increment. Game Titles containing a progressive or Incrementing Feature shall use Jackpot Base values when computing minimum return.

REQ-VGM-LINE-02: The video line Game Title shall have a Maximum Award of $800 including any combined award from a Bonus Game(s).

REQ-VGM-LINE-03: The video line Game Title shall have a maximum bet of $2 per game.

REQ-VGM-LINE-04: The video line Game Title draws numbers or symbols in order as generated by the RNG.

REQ-VGM-LINE-05: The video line Game Title shall not have a theoretical return greater than 92% for each bet increment. A qualified independent testing service must supply detailed written verification.

REQ-VGM-LINE-06: The video line Game Title shall draw and display a minimum of three numbers or symbols in a line. To meet this requirement, each of the minimum three numbers or symbols should be visually drawn and displayed.

REQ-VGM-LINE-07: The video line Game Title shall clearly identify all paylines.

REQ-VGM-LINE-08: The video line Game Title displays and identifies each winning combination of numbers or symbols and the amount won.

REQ-VGM-LINE-09: The movement of numbers or symbols shall stop automatically, or the player may manually stop the movement prior to the automatic stop.

REQ-VGM-LINE-10: Winning combination(s) must form a vertical, horizontal or diagonal line or other specified shapes that may include: matching numbers or symbols or particular numbers or symbols that appear in any sequence or position.

REQ-VGM-LINE-11: The video line Game Title shall conform to the Standard Game Type as defined in Administrative Rules of Montana 23.16.1802.

4.26 Validation Requirements

REQ-VGM-VAL-01: The VGM shall incorporate a male (pins) RS232 DB9 connector implementing the standard pin out as defined by the EIA-232 standard. The connector shall be easily accessible and shall be identified as "GAT" through clear physical or software labeling and reside in a locked area of the VGM. With GAT enabled on the VGM, the connector shall be dedicated solely for GAT communication.

REQ-VGM-VAL-02: VGM shall incorporate GAT version 3.5 or later for verifying all Control Program components including the BIOS, extended BIOS, MBR, OS partitions, game partitions and paytables. A GAT test tool can be provided from the GCD upon request. Refer to the Gaming Standards web site for protocol specifications: gamingstandards.com.

REQ-VGM-VAL-02.2: The VGM should not require a Master Reset to GAT or to configure for GAT.

REQ-VGM-VAL-03: The VGM shall send the file *ProgramID.xml* in response to the GAT3 request "Get File ProgramID.xml." *ProgramID.xml* will be of the following form, where *XXXXXX* is the Program Name of the VGM:

```
<?xml version="1.0"?>
<ProgramID>
    <Value>XXXXXX</Value>
</ProgramID>
```

Refer to GSA GAT Protocol section 4.2.2 for "Special Function: Get File filename.xml."

REQ-VGM-VAL-04: The VGM shall complete the GAT authentication process for all Control Program data within 5 minutes. If required, graphics and sound files and all unused space may be

excluded from these calculations in order to meet this timeframe requirement. The option to enable or disable calculations over these components must be available upon request at the VGM level. If an option between calculations exists, it shall default to the choice that will complete in under 5 minutes (Control Program components).

4.27 History Recall Requirements

REQ-VGM-HISTORY-01: The VGM shall incorporate a section in the Operators' Menu that supports viewing and exporting at least 10,000 of the most recent games played. Record number 1 should always be the most recent game played. Each play of a Standard Game Type including any of its associated Bonus Games and/or Sessions shall be treated as one record. The 100 most recent records shall be illustrated. As an example of illustration a keno game that triggers a pick-a-prize bonus and then a wheel spin bonus would be represented by 3 images: 1) the keno board after last ball drawn 2) the pick-a-prize screen with the images of player chosen pots and 3) the wheel with the final landing position highlighted. At a minimum, each record shall include information in the following order (or an order approved by the department):

- game record number (1 – 10,000)
- date game is initiated
- time game is initiated (HH:MM:SS) (24 hr format) "D" or "S" (depending on Standard or Daylight Time)
- Game Title name
- player bank balance before game
- credits/cash amount bet
- credits/cash value won
- player bank balance after game
- credit denomination (if applicable)
- player marked spots (if applicable)
- game marked spots (if applicable)
- spots/balls/stops/cards drawn
- multipliers awarded (if any)
- pertinent bonus information (prize pools, amounts awarded, etc.)
- progressive meters (if applicable)
- Incrementing Feature meters (if applicable)
- program ID
- VGMID
- any non-required data

REQ-VGM-HISTORY-02: The VGM shall incorporate a section in the Operators' Menu that supports viewing and exporting at least the 1,000 most recent Bills In. Record number 1 should always be the most recent bill inserted. At a minimum, each record shall include information in the following order(or an order approved by the department):

- bill record number (1-1,000)
- date bill is inserted
- time bill is inserted (HH:MM:SS) (24 hr format) "D" or "S" (depending on Standard or Daylight Time)
- player bank balance before bill insertion
- value of bill inserted
- player bank balance after bill insertion
- program ID
- VGMID
- any non-required data

REQ-VGM-HISTORY-03: The VGM shall incorporate a section in the Operators' Menu that supports viewing and exporting at least the 1,000 most recent cashout tickets. Record number 1 should always be the most recent cashout ticket printed. At a minimum each record shall include information in the following order(or an order approved by the department):

- cashout ticket record number (1-1,000)
- date cash out was initiated
- time cash out was initiated (HH:MM:SS) (24 hr format) "D" or "S" (depending on Standard or Daylight Time)
- cashout ticket value
- validation number
- sequence ticket number
- program ID
- VGMID
- any non-required data

REQ-VGM-HISTORY-04: The VGM shall support a method in the Operators' Menu for exporting the records described in REQ-VGM-History-01 to REQ-VGM-History-03 into three easily viewable formatted files (.CSV, .db, etc.) through a connected USB device.

REQ-VGM-HISTORY-05: The history recall data shall not be cleared during a Lifetime Memory Clear. An option shall exist prompting the operator to retain or clear the history recall data during a Master Reset.

REQ-VGM-HISTORY-06: The cashout ticket history should be available immediately after holding the Audit Key for 3 seconds.

REQ-VGM-HISTORY-07: If the history recall data resides on a removable disk, the VGM shall halt and suspend game play immediately if it cannot be detected or is inoperable.

5. Audit Storage Device

5.1 Device Requirements

REQ-ASD-HW-1: An ASD shall be a removable, portable, non-volatile, electronic memory storage device. The intent is to allow an owner/operator to remove the ASD from the VGM and read, store or copy the ASD data.

REQ-ASD-HW-2: An ASD shall be a device that is compatible with a standard port on a personal computer. An example of an acceptable ASD device would be a flash drive that plugs into the USB port on a PC.

REQ-ASD-HW-3: An ASD shall have a minimum storage capacity of 1,990,000,000 bytes 1.85GB. The purpose of requiring non-standard minimum capacity is due to the variance of available storage across different manufacturers of USB flash devices.

REQ-ASD-HW-4: An ASD shall allow multiple read and write operations throughout its lifetime.

REQ-ASD-HW-5: An ASD shall utilize FAT32 file system.

5.2 Data File Requirements

REQ-ASD-DATA-1: All ASD data files shall be in the format of tab delimited flat file and have a txt file extension (i.e. *.txt).

REQ-ASD-DATA-2: All ASD data files shall use an ASCII CR+LF for specifying a newline. The ASCII hexadecimal values for CR followed by LF are 0x0D followed by 0x0A. This newline convention will allow the data files to be usable on most operating systems.

REQ-ASD-DATA-3: No records in ASD data files shall use the tab character except for delimiting between fields.

REQ-ASD-DATA-4: All ASD data files shall have a read-only attribute. This requirement is to prevent accidental corruption of the files when viewing or archiving ASD data on a PC by the owner or operator of the VGM.

REQ-ASD-DATA-5: An ASD shall contain a read-only readme.txt file at the root of the device. See Appendix G of this document for the text. The purpose of this file is to inform owners and operators of the contents on the ASD and to give them warning to not delete or modify any files. This readme.txt file is available from GCD TSS upon request.

REQ-ASD-DATA-6: All ASD data files file shall exist on the ASD for a minimum of one year from the time they were created. Files older than one year may be deleted by the VGM to conserve free storage space. The deletion of data older than one year shall not require input from the operator.

REQ-ASD-DATA-7: Records shall be appended to the end of any existing ASD data files with the same filename when the date on the VGM is moved backwards in time past the current date. The

scenario where an audit log file contains multiple "Day Start" or "Day End" records may exist and is acceptable. It is also acceptable for a game data file to be appended to in the event the two records occur at the same date and time.

5.2.1 Audit Log Files

REQ-ASD-DATA-LOG-1: An audit log file shall have the all lowercase filename log_{VGMID}_{YYYYMMDD}_{HHMMSS[ds]}.txt where {VGMID} is the VGMID number, {YYYYMMDD} is the year, month and day in numeric format, and {HHMMSS[ds]} is the time of file creation in 24-hour format 2-digit hour, minutes, seconds ending with "d" for daylight savings time or "s" for standard time.

REQ-ASD-DATA-LOG-2: All audit log files shall reside on the ASD in the directory named "audit_logs" under the root.

REQ-ASD-DATA-LOG-3: An audit log file record shall contain data for the fields:

Name	Description	Align	Size	Padding	Format
Reason	Event reason	Left	20	Spaces	Alpha Numeric – See REQ-DATA-LOG-4 for valid reasons
Date	Date of record	Right	10	Zeros	2-digit numeric month, day, and 4-digit year separated by "/"
Time	Time of record in 24-hour format	Right	9	Zeros	24-hour format 2-digit hour, minutes, seconds separated by ":" and ending with "D" for daylight savings time or "S" for standard time
Ticket#	Cashout ticket sequential number	Right	8	Spaces	Numeric
Ticket$	Cashout ticket value	Right	11	Spaces	Numeric dollars and cents separated with a period
$$IN	Lifetime in amount	Right	11	Spaces	Numeric dollars and cents separated with a period
$$PL	Lifetime played amount	Right	11	Spaces	Numeric dollars and cents separated with a period
$$WN	Lifetime won amount	Right	11	Spaces	Numeric dollars and cents separated with a period
$$PD	Lifetime paid amount	Right	11	Spaces	Numeric dollars and cents separated with a period
$$CR	Credit available for play	Right	11	Spaces	Numeric dollars and cents separated with a period
Games PL	Lifetime games played count	Right	8	Spaces	Numeric
Games WN	Lifetime games won count	Right	8	Spaces	Numeric
Name	Name of licensed establishment	Left	20	Spaces	Alpha Numeric
Location	Name of city, town or county	Left	20	Spaces	Alpha Numeric
VGMID	VGM identification decal number	Right	6	Spaces	Numeric
PGM#	Program name	Right	6	Spaces	Alpha Numeric

Serial	VGM serial number	Left	20	Spaces	Alpha Numeric

REQ-ASD-DATA-LOG-4: An audit log record shall be created for each of the following events:

Reason	Description
Day Start	Start of day for logging (00:00:00)
Day End	End of day for logging (23:59:59)
Cash Ticket	Cashout ticket printed
New Software	New software loaded on the VGM
Before Memory Clear	VGM meter data before lifetime memory clear
After Memory Clear	VGM meter data after lifetime memory clear
Cash Accessed	Cash area accessed
Logic Accessed	Logic area accessed
Before Jackpot Alter	VGM meter data before progressive or IF was changed
After Jackpot Alter	VGM meter data after progressive or IF was changed
Manual Request	Manual request after Audit Key usage

REQ-ASD-DATA-LOG-5: An audit log file shall contain the field record names in *REQ-ASD-DATA-LOG-3* as the first line of the file in the order specified top to bottom in the table and the second line containing "-" characters numbering the amount in the size specification for each field. See Appendix H of this document for a sample.

REQ-ASD-DATA-LOG-6: A new audit log file shall be created at 00:00:00 every day unless the VGM is powered off. A new audit log shall be created and "Day Start" record shall be recorded if the VGM is powered on and no audit log file yet exists for the current day.

REQ-ASD-DATA-LOG-7: A new audit log file record shall be created any time one of the events in REQ-DATA-LOG-4 occurs on the VGM.

REQ-ASD-DATA-LOG-8: An audit log file record with reason of "Cash Ticket" shall contain data for all fields after the printed cashout ticket is logged

REQ-ASD-DATA-LOG-9: An audit log file record with any reason except "Cash Ticket" shall contain data for all fields except "Ticket$" and "Ticket#" which shall contain only spaces.

REQ-ASD-DATA-LOG-10: An audit log file shall contain at minimum, records with a "Day Start" and a "Day End" reason. The "Day Start" shall occur at 00:00:00 and the "Day End" shall occur at 023:59:59. In the event the VGM is powered off during these times the "Day End" record(s) shall not be recorded and the "Day Start" record shall be recorded when the VGM is later powered on (See *REQ-ASD-DATA-LOG-6*).

5.2.2 Progressive Log Files

REQ-ASD-DATA-PROGRESSIVE-1: A progressive log file shall have the all lowercase filename progressive_{VGMID}_{YYYYMMDD}_{HHMMSS[ds]}.txt where {VGMID} is the VGMID number assigned to the VGM, {YYYYMMDD} is the year, month and day in numeric format, and {HHMMSS[ds]} is the time of file creation in 24-hour format 2-digit hour, minutes, seconds ending with "d" for daylight savings time or "s" for standard time.

REQ-ASD-DATA-PROGRESSIVE-2: All progressive log files shall reside on the ASD in the directory named "progressive_logs" under the root.

REQ-ASD-DATA-PROGRESSIVE-3: A progressive log file record shall contain data for the fields:

Name	Description	Align	Size	Padding	Format
Date	Date of record	Right	10	Zeros	2-digit numeric month, day, and 4-digit year separated by "/"
Time	Time of record in 24-hour format	Right	9	Zeros	24-hour format 2-digit hour, minutes, seconds separated by ":" and ending with "D" for daylight savings time or "S" for standard time
Game Name	Name of game	Left	20	Spaces	Alpha Numeric
Type	Game type	Left	5	Spaces	Must be "Poker," "Keno," "Bingo" or "Line"
Denom$	Game denomination	Right	11	Spaces	Numeric dollars and cents separated with a period - This is the bet increment if the game does not support denominations
Progressive Name	Name of progressive	Left	20	Spaces	Alpha Numeric - Do not use "x/x" where x is numeric
Amount$	Amount of progressive Jackpot won	Right	11	Spaces	Numeric dollars and cents separated with a period
Before $$JP	Jackpot amount before win	Right	11	Spaces	Numeric dollars and cents separated with a period
After $$JP	Jackpot amount after win	Right	11	Spaces	Numeric dollars and cents separated with a period
Before $$ES	Escrow amount before win	Right	11	Spaces	Numeric dollars and cents separated with a period
After $$ES	Escrow amount after win	Right	11	Spaces	Numeric dollars and cents separated with a period
$$PD	Lifetime Jackpot Paid amount	Right	11	Spaces	Numeric dollars and cents separated with a period
$$BS	Jackpot Base amount	Right	11	Spaces	Numeric dollars and cents separated with a period
$$MX	Maximum Jackpot amount	Right	11	Spaces	Numeric dollars and cents separated with a period

REQ-ASD-DATA-PROGRESSIVE-4: A progressive log file shall contain the field record names in *REQ-ASD-DATA-PROGRESSIVE-3* as the first line of the file in the order specified top to bottom in the table and the second line containing "-" characters numbering the amount in the size specification for each field. See Appendix H of this document for a sample.

REQ-ASD-DATA-PROGRESSIVE-5: A new progressive log file record shall be created when a progressive Jackpot is won.

REQ-ASD-DATA-PROGRESSIVE-6: A progressive log file record shall contain data for all fields.

REQ-ASD-DATA-PROGRESSIVE-7: A new progressive log file shall be created at 00:00:00 every day unless the VGM is powered off. A new progressive log file shall be created if the VGM is powered on and no progressive log file yet exists for the current day.

REQ-ASD-DATA-PROGRESSIVE-8: A progressive log file shall exist for everyday even if no progressive Jackpots are won.

5.2.3 Games Data Files

REQ-ASD-DATA-GAMES-1: A games data file shall have the all lowercase filename games_{VGMID}_{YYYYMMDD}_{HHMMSS[ds]}_{REASON}.txt where {VGMID} is the VGMID number assigned to the VGM, {YYYYMMDD} is the year, month and day in numeric format, {HHMMSS[ds]} is the time of file creation in 24-hour format 2-digit hour, minutes, seconds ending with "d" for daylight savings time or "s" for standard time, and {REASON} is the lowercase reason that caused the file to be created with all spaces replaced by underscores (i.e. "Before Memory Clear" would be "before_memory_clear").

REQ-ASD-DATA-GAMES-2: All games data files shall reside on the ASD in the directory named "games_data" under the root.

REQ-ASD-DATA-GAMES-3: A games data file record shall contain data for the fields:

Name	Description	Align	Size	Padding	Format
Game Name	Name of game	Left	20	Spaces	Alpha Numeric
Type	Game type	Left	5	Spaces	Must be "Poker," "Keno," "Bingo," "Bonus" or "Line"
Denom$	Game denomination	Right	11	Spaces	Numeric dollars and cents separated with a period - This is the bet increment if the game does not support denominations
$$PL	Lifetime played amount	Right	11	Spaces	Numeric dollars and cents separated with a period
$$WN	Lifetime won amount	Right	11	Spaces	Numeric dollars and cents separated with a period
Progressive Name	Name of progressive	Left	20	Spaces	Alpha Numeric - Do not use "x/x" where x is numeric
$$JP	Jackpot amount	Right	11	Spaces	Numeric dollars and cents separated with a period
$$ES	Jackpot Escrow amount	Right	11	Spaces	Numeric dollars and cents separated with a period
$$PD	Lifetime Jackpot Paid amount	Right	11	Spaces	Numeric dollars and cents separated with a period
$$BS	Jackpot Base amount	Right	11	Spaces	Numeric dollars and cents separated with a period
$$MX	Maximum Jackpot amount	Right	11	Spaces	Numeric dollars and cents separated with a period

REQ-ASD-DATA-GAMES-4: A games data file shall contain the field record names in REQ-DATA-GAMES3 as the first line of the file in the order specified top to bottom in the table and the second line containing "-" characters numbering the amount in the size specification for each field. See Appendix H of this document for a sample.

REQ-ASD-DATA-GAMES-5: A new games data file record shall be created when a new record is added to the audit log file for all reasons except the Cash Ticket event. The VGMID, date, time and reason from the event in the audit log file are used in the games data file name specified in REQ-ASD-DATA-GAMES-1. The games data file shall contain all combinations of Game Titles,

denominations, progressive jackpots and Incrementing Features and their associated meters each as one record.

REQ-ASD-DATA-GAMES-6: A games data file record with a type of Keno, Poker, Bingo or Line shall contain data for all fields except Progressive Name, $$JP, $$ES, $$PD, $$BS, and $$MX which are populated only if the game supports progressive Jackpots or Incrementing Features. If a game does not support progressive Jackpots or Incrementing Features the fields Progressive Name, $$JP, $$ES, $$PD, $$BS, and $$MX shall only contain spaces. If a game supports an Incrementing Feature it should be listed with Progressive Name starting IF followed by a descriptive name and use the $$JP and $$ES fields to represent IF and IFES values and $$PD, $$BS and $$MX shall only contain spaces.

REQ-ASD-DATA-GAMES-7: A games data file record with a type of Bonus shall contain data for all fields except Denom$, $$PL, Progressive Name, $$JP, $$ES, $$PD, $$BS, and $$MX which shall only contain spaces.

REQ-ASD-DATA-GAMES-8: The ASD shall have electronic meters for each Game Title, Global Bonus, progressive and Incrementing Feature. This granularity should match the Audit Ticket.

REQ-ASD-DATA-GAMES-9: All games should be reported regardless of whether the game is enabled/disabled in the Operators' Menu. If a Master Reset is required to enable/disable games they do not need to be tracked while disabled. This granularity should match the Audit Ticket.

5.3 Security Requirements

REQ-ASD-SECURITY-1: All VGM manufacturers shall be assigned a unique RSA public and private key pair supplied in the SSH protocol version 1 file format.

REQ-ASD-SECURITY-2: All ASD files shall contain a signature as the last 96 bytes in the file with nothing following including any carriage returns or newlines.

REQ-ASD-SECURITY-3: The signature shall be a SHA-1 hash of the file contents (excluding any existing signature) that is encrypted with the manufacture's RSA public key using OAEP and will be 96 bytes in size.

REQ-ASD-SECURITY-4: The signature shall be calculated and recorded anytime a data file is created or modified.

5.4 VGM Requirements

REQ-ASD-VGM-1: The VGM shall be able to display any data file contained on the ASD from the Operators' Menu or Audit Key in its raw and unmodified form. The file signature may be omitted from this view.

REQ-ASD-VGM-2: The VGM shall halt and suspend game play immediately if the ASD cannot be detected or is inoperable, the ASD has reached FAT32 directory/file limitation (approximately 12,000 files), the ASD has unexpected files, directories, or contains files from a VGM with a different VGMID. VGMs may require their own specific files for security purposes and those files would be considered expected. Any extra files saved as a ".txt" must start with the name "readme."

REQ-ASD-VGM-5: The VGM shall verify the data written to the ASD is correct after every write operation otherwise the VGM shall halt and suspend game play if a problem is detected.

REQ-ASD-VGM-6: The VGM shall allow only one ASD device to be used at one time.

REQ-ASD-VGM-7: The ASD data shall not be cleared during a Lifetime Memory Clear or a Master Reset.

REQ-ASD-VGM-8: The ASD shall reside in a locked area within the VGM.

REQ-ASD-VGM-9: The VGM shall support ASD removal and insertion at runtime.

REQ-ASD-VGM-10: The VGM shall halt and suspend game play if the VGMID is not set. Scenarios of the VGMID not being set could be due to the VGM being new, logic board replacement, memory error, VGM crash or manual deletion from the Operators' Menu.

REQ-ASD-VGM-11: The VGM shall analyze and verify the integrity of all files on the ASD when it is powered on and when a new ASD is inserted using the manufacturer's RSA private key. Lifetime Memory Clear or Master Reset operations shall have no adverse effect on the ability to verify the integrity of ASD files. The VGM shall halt and suspend game play if the integrity of any file is broken.

Appendix A: Glossary

Access Ticket – A shortened Audit Ticket as described in REQ-VGM-ACCOUNTING-01 printed when cash or logic areas are accessed that does not contain individual game or progressive metering.

Altered Play – One or more Standard Game Type games that deviates from the initial play of the game.

Audit Key – An electronic keyed switch available externally from the VGM that enters the Operators' Menu when turned.

Audit Storage Device (ASD) – Removable, portable, non-volatile, electronic, memory storage device used to store electronic records of VGM performance.

Audit Ticket – A ticket as described in REQ-VGM-ACCOUNTING-01 that contains all individual game and progressive metering acquired through use of an Audit Key or Lifetime Memory Clear.

Bonus Game – A game other than Standard Game Type that does not simulate an illegal gambling activity or enterprise.

Control Program – Any software, source language or executable code which affects the result of a wager by determining win or loss. The term includes, but is not limited to, software, source language or executable code associated with the:

(a) Random number generation process;
(b) Mapping of random numbers to game elements to determine game outcome;
(c) Evaluation of the randomly selected game elements to determine win or loss;
(d) Payment of winning wagers;
(e) Game recall;
(f) Game accounting including the reporting of meter and log information to on-line slot metering system;
(g) Monetary transactions conducted with associated equipment;
(h) Software verification and authentication functions which are specifically designed and intended for use in a gaming device;
(i) Monitoring and generation of game tilts or error conditions; and
(j) Game operating systems which are specifically designed and intended for use in a gaming device.

Note: The term does not include software used for artistic attributes of a game including graphics, sound and animation providing entertainment unless such elements are material to game play because they are necessary for the player to understand the game or game outcome.

Escrow ($$ES) – This is an overflow meter containing the portion of Player Contribution that cannot be part of the Jackpot due to Maximum Award capping. The Escrow is zero when the Player Contribution plus the Jackpot Base amount is less than the Maximum Jackpot amount.

Flat File – electronic record that is stripped of all specific application (program) formats. This allows the data elements to be migrated into other applications for manipulation.

Free Games – Games of Standard Game Type offered at no risk to the player.

Game Title – An identifier representing a unique playable Standard Game Type at its most basic level. For example, program name ABC123 has a poker game "Jacks or Better" with unique paytables for the five cent and twenty-five cent denominations. The Game Titles might be "Jacks or Better .05" and "Jacks or Better .25".

Game Authentication Terminal (GAT) – A communication standard used by regulators and operators to identify and authenticate gaming software and firmware in the field as defined by Gaming Standards Association.

Gambling Control Division (GCD) – A division of the Montana Department of Justice.

Global Bonus – A Bonus Game whose play and award can be triggered from the play of more than one Game Title.

Incrementing Feature (IF) – Any type of counter/value, not representing credits/cash value, that is built or awarded through defined game behavior that will eventually trigger Altered Play or a Jackpot.

Incrementing Feature Escrow (IFES) – Overflow meter for Incrementing Feature.

Jackpot ($$JP) – This is the combination of Player Contribution plus the Base Jackpot Amount, minus the Escrow Amount. This is displayed on Audit Tickets and to the player.

Jackpot Amount Awarded (Amount$ or $$AM) – Actual value of the Jackpot awarded when considering Maximum Award capping and Other Wins. This value may be less than the whole Jackpot since Jackpot Base and Other Wins are awarded before using Player Contribution.

Jackpot Base ($$BS) – This is the seed amount of the Jackpot before Player Contribution begins to accumulate.

Jackpot Alter Ticket – A set of before and after tickets that log progressive or Incrementing Feature meter values during a change in configuration from the Operators' Menu.

Lifetime Jackpot Paid ($$PD) – Amount of Jackpot paid since the last Lifetime Memory Clear (if progressive meters were not preserved) or Master Reset.

Lifetime Meters – Meters tracked since the previous Lifetime Memory Clear (if progressive meters were not preserved) or Master Reset.

Lifetime Memory Clear – A procedure found in the Operators' Menu to clear all electronic meters (may exclude progressive meters) but retains the establishment, city, time, date, serial number, program name, VGM ID, SAS Validation Type, SAS address and all history recall data.

Master Reset – An procedure using a device independent of game software to clear part or all of memory.

Maximum Award – The maximum win allowed per game by law in Montana is $800.00.

Maximum Jackpot ($$MX) – The maximum Jackpot amount. Could be the Maximum Award or an arbitrarily fixed amount less than the Maximum Award.

Operators' Menu – A screen accessed by use of the Audit Key that allows the operator to change settings and features. This may also be known as the back office.

Optimal Asymmetric Encryption Padding (OAEP) – a method for encoding messages with RSA. An OAEP encoded message consists of a "masked data" string concatenated with a "masked random number."

Other Wins – Any amount of the award not coming from a Jackpot when triggering a Jackpot. This could be an award from a defined combination, additionally triggered Bonus Game, etc.

Period Meters – Meters tracked since the previous Lifetime Memory Clear, Period Meter Clear or Master Reset.

Period Meters Clear – A procedure found in the Operators' Menu to clear all Period electronic meters but retains the establishment, city, time, date, serial number, VGMID, SAS Validation Type, SAS address and Lifetime Meters.

Player Contribution – This is the amount of the Jackpot that is contributed entirely through game play, whether through placing of bets or achieving wins.

Programmable Read-Only Memory – Includes PROMs, One Time Programable (OTP) Non-Volatile Memory (NVM), EPROMs, OTP EPROMs, EEPROMs and any other form of read-only memory that is programmed onto a physical read-only chip.

Random Access Memory (RAM) – A form of computer data storage that stores data and machine code currently being used.

Random Number Generator (RNG) – A program that creates a sequence of numbers or symbols that cannot be reasonably predicted better than by a random chance.

RS232 DB9 –

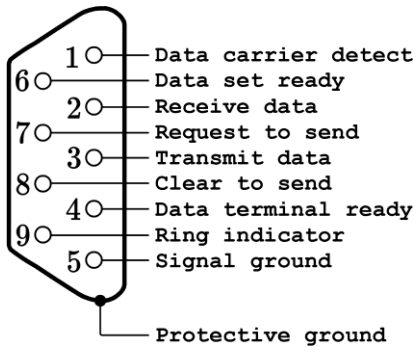

RSA Cryptography – a public-key cryptosystem in which public and private keys are derived from the factors of very large numbers. It is an asymmetric form of encryption using a public key to lock the data and a private key to decrypt it.

Session – Game or series of games that has a possibility to turn into a Bonus Game.

Slot Accounting System (SAS) – A serial communications protocol developed by International Game Technology.

Standard Game Type – A conforming game under Title 23, Chapter 5, part 6 MCA. This includes video Poker, Keno, Bingo and Line.

SSH (Secure SHell) – a system for secure, encrypted connections between two computers over a network. SSH uses one open and one secret key.

Technical Services Section (*TSS*) – A section within GCD

Trigger Game – A Standard Game Type that determines progression to Bonus Games, Global Bonus, Free Games or Altered Play.

Video Gambling Machine (VGM) – A gambling device approved for legal operation in Montana.

Video Gambling Machine Identification Number (VGMID) – A unique numerical decal supplied by GCD that is affixed to an approved VGM.

Appendix B: Static Test Procedure

EQUIPMENT USED:

1) High Frequency Generator (HFG), Electro Technic Product m/n BD10AS (operating frequency approximately 500 kHz)
2) Peak Voltage Calibrator (PVC), Electro Technic Product m/n 1240
3) Spring Electrode Tip, Electro Technic Product m/n 1211
4) Properly grounded wall outlet

TEST PROCEDURE:

1) Calibrate the HFG for a maximum voltage output of 40,000 volts by performing the following steps:
   a) Turn off power to the HFG.
   b) Remove the spring electrode tip from the HFG.
   c) Insert the fixed electrode shaft of the PVC into the electrode socket of the HFG.
   d) Attach the PVC alligator clip lead to earth ground.
   e) Turn the HFG voltage knob counter clockwise until seated.
   f) Adjust the PVC to 40,000 volts.
   g) Apply power to the HFG and slowly turn the voltage knob on the HFG clockwise until a static arc jumps the gap between the electrodes inside the PVC.
   h) Unplug the HFG, remove the PVC and install the spring electrode tip.
2) Power up the VGM using a properly grounded wall outlet and insure proper operation.
3) Plug the HFG into a properly grounded wall outlet.
4) Apply the output of the HFG to the entire exterior of the VGM. Approximately every square inch of the device should be covered, top and all sides. The HFG should be in motion at all times. This test should take approximately 3 minutes for a standard upright gambling device. If any VGM failure is detected when a certain area is induced with static, that area should be induced again. The HFG should be held the maximum distance from the VGM while still producing a static arc.
5) When the game data, including ASD, before the test is 100% identical to the game data and ASD after the test, the VGM is determined to have passed the test.

Appendix C: RNG Test

The test program must have an option to send the minimum and maximum range of numbers that may be generated for each Standard Game Type. Alternate methods or communications protocols may be considered but must first be discussed with the GCD TSS Lab. A sample program used to gather the RNG data can be obtained from GCD TSS upon request.

COMMUNICATIONS PROTOCOL:

1) RS232 asynchronous communication
2) DB9 cable (minimum length 6 feet)
3) 115200 baud
4) No parity
5) 8 data bits
6) 1 stop bit

PROCEDURE:

1) Look for ASCII letter "R" (ready) via RS232 connection.
2) When "R" is read:
   a) Poker
      i) Using the RNG, generate the game numbers.
      ii) Send ASCII representations of the 10 cards to the PC via RS232 connection, using the "Defined Data Format."
   b) Keno
      i) Using the RNG, generate the game numbers.
      ii) Send ASCII representations of the 20 numbers to the PC via RS232 connection using the "Defined Data Format."
   c) Bingo
      i) Using the RNG, generate the game numbers. There will be 2 separate tests: the first for the 75 game numbers and second for the 15 numbers for each column on the Bingo card.
      ii) For the first test, send ASCII representations of the 75 numbers to the PC via RS232 connection, using the "Defined Data Format."
      iii) For the second test, send ASCII representations of the numbers for each column to the PC via RS232 connection, using the "Defined Data Format."
   d) Line
      i) Using the RNG, generate the game numbers. The VGM must have an option to play all possible reels and stops.
      ii) For *x* number of reels, send ASCII representations of the *x* reels to the PC via RS232 connection, using the "Defined Data Format."
3) Defined Data Format:
   a) Poker
      i) Each RNG value must be 2 digits in length.
      ii) All values must be consecutive and between "00" and "51" or "01" and "52" for poker w/o a joker, "00" and "52" or "01" and "53" for poker utilizing 1 joker, and "00" and "53" or "01" and "54" for poker utilizing 2 jokers.
      iii) Send 1 ASCII "space" between each 2-digit value; do not send anything after the last two digit value (this includes spaces, line feeds and carriage returns).
      iv) A total of 29 ASCII characters should be sent to the PC for each game of poker played.
   b) Keno

i) Each RNG value must be 2 digits in length.
ii) All values must be consecutive and between “00” and “79” or “01” and “80”.
iii) Send 1 ASCII “space” between each 2-digit value; do not send anything after the last two digit value (this includes spaces, line feeds and carriage returns).
iv) A total of 59 ASCII characters should be sent to the PC for each game of keno played.

c) Bingo
   i) Game Numbers
      a. Each RNG value must be 2 digits in length.
      b. All values must be consecutive and between “00” and “74” or “01” and “75”.
      c. Send 1 ASCII “space” between each 2 digit value; do not send anything after the last two digit value (this includes spaces, line feeds and carriage returns).
      d. A total of 224 ASCII characters should be sent to the PC for each game of bingo played.
   ii) Bingo Card Numbers
      a. Each value must be 2 digits in length.
      b. All numbers must be consecutive and between:
         “01” and “14” or “01” and “15” for the B column,
         “15” and “29” or “16” and “30” for the I column,
         “30” and “44” or “31” and “45” for the N column,
         “45” and “59” or “46” and “69” for the G column, and
         “60” and “74” or “61” and “75” for the O column.
         5 numbers are generated for each column, with the exception of the “N” column, which will be 4 numbers.
      c. Send 1 ASCII “space” between each 2 digit value; do not send an ASCII “space” following the last 2 digit value in the “O” column (this includes spaces, line feeds and carriage returns).
      d. A total of 71 ASCII characters should be sent to the PC for each complete Bingo Card for which the numbers are generated.

d) Line
   i) Each RNG value must be 2 digits in length.
   ii) For an *n*-stop reel, the values chosen by the RNG must be consecutive and between either “00” and (n – 1) or “01” and n.
   iii) Send 1 ASCII “space” between each 2-digit value; do not send anything after the last 2-digit value (this includes spaces, line feeds and carriage returns).
   EXAMPLE: A total of 14 ASCII characters should be sent to the PC for a 5 reel line game.

4) Revert to the “game over” state and wait for the next “R”.

Appendix D: SAS to MT Cross Reference

Meter Cross Reference

SAS Meter Label	SAS Long Poll Command	SAS Meter Code Value	Montana Meter Label	Montana Meter Name
Total Coin In	6F	0000	$$PL	Money Played
Total Coin Out	6F	0001	$$WN	Money Won
Total Canceled Credits	6F	0004	$$PD	Money Paid
Total Drop	6F	0024	$$IN	Money In
Current Credits	6F	000C	$$CR	Current Credits

One credit is defined as $0.01 for Montana implementation.

SAS Gaming Machine Asset Number / House ID to VGMID Cross Reference

SAS Label	SAS Long Poll Command	Montana Label
Gaming Machine Asset Number / House ID	7B	VGMID

Appendix E: Prohibited SAS Long Polls

Long Poll Number	Long Poll Name
72	AFT transfer funds
73	AFT register gaming machine
74	AFT game lock and status request
75	Set AFT receipt data
76	Set custom AFT ticket data
22	Load non-cashable money
23	Load promotional money
24	Force cash out to host (dollars)
25	Force cash out from gaming machine (dollars)
29	Load cashable money
62	Load non-cashable credits
63	Load promotional credits
64	Force cash out to host (credits)
65	For cash out from gaming machine (credits)
67	Cash out win to host
69	Load cashable credits

Appendix F: USB Flash Drive Durability Testing

Concerns over the durability and usable lifespan of USB flash (thumb) drives prompted the following testing. The flash memory used in these devices is known to have a limited lifespan and can only survive a fixed number of writes. SLC flash is supposed to have a life span of 100,000 writes and MLC flash should have a lifespan of 10,000 writes (http://www.getusb.info/what-is-the-life-cycle-of-a-usb-flash-drive/). An ASD device may receive thousands of writes per day and must be able to record an entire year's worth of data as per requirements.

The only prior lifespan testing of flash drives found via the web was here: http://www.bress.net/blog/archives/114-How-Long-Does-a-Flash-Drive-Last.html. The author of this test found that 1GB Sony USB flash drive was able to survive 90.5 million writes before it stopped functioning. The author suspected the drive utilized a wear leveling algorithm to prolong its usable lifespan. More info on wear leveling can be found in this white paper by Corsair memory: http://docs.aboutnetapp.ru/FAQ_flash_drive_wear_leveling.pdf. Most flash drive manufacturers do not disclose if their products utilize wear leveling but research showed that many flash controllers support this feature.

The testing done at the Montana GCD TSS was performed using three PNY Attaché 2GB USB flash drives. These flash drives were priced in the bottom tier of what was available locally. All tests were performed on a PC running Windows XP and with buffering disabled for the drive. The following three test scenarios were executed.

1. Continually write 1KB of random data to one file on an empty flash drive and then read the file to verify the contents using a Perl script. Each write operation will overwrite the previous operation keeping the size of the file always at 1KB.
2. Continually write 1KB of random data to one file on a full flash drive and then read the file to verify the contents using a Perl script. Each write operation will overwrite the previous operation keeping the size of the file always at 1KB. The flash drive was filled with a large random data file (created with dd) leaving no free space.
3. Continually write and read the entire 2GB flash drive using the flash drive tester from Virtual Console (http://www.vconsole.com/client/?page=page&id=13).

The results of our testing are below:

Test	Successful Test Cycles
1 KB File on Empty Drive	85.9 Million
1 KB File on Full Drive	80.2 Million
Write Entire 2GB Drive	11,109

Additionally, three more 2GB USB flash drives were purchased from different manufacturers locally. These drives where filled with random data until only 1MB of free space was left and then the same test writing to a 1KB file was executed. This scenario was meant to simulate actual ASD usage fulfilling the free space requirements in this document. The results are located in the table below.

Flash Drive Model	Successful Test Cycles
Staples Relay	104.9 Million
SanDisk Cruzer Micro	149.4 Million
Sony Microvault	28.2 Million

At time of writing this document only the Sony flash drive has encountered a failure. However, once it was reformatted it was usable again. In conclusion, our testing has shown that 2GB USB flash drives available today are robust enough to meet our requirements for use as an ASD.

Appendix G: readme.txt

```
WARNING: Do not modify or delete anything on this device!  Doing so will render
the data invalid and you may be subject to penalty.

The contents of this device contain important audit data from a Video Gambling
Machine.  This data may need to be reported to the State of Montana for tax
purposes.  Please see http://www.doj.mt.gov/gaming/auditstoragedevice.asp for
further information.

The files contained on this device can be opened for reading with any text
editor (such as Microsoft Word) or workbook program (such as Microsoft Excel).
The data is tab delimited and organized into rows and columns.

Meters can be balanced on a machine using the formula:
($$IN + $$WN) - $$PL = $$PD + $$CR

All files contain a signature at the end of the file that may not be readable
and is used for verification purposes.

The contents of this device are described below:
audit_logs - Contains log files for events with meter data that
             have occurred on the video gambling machine.  The
             file names have the format log_{VGMID}_{YYYYMMDD}.txt
             where {VGMID} is the video gambling machine
             identification number assigned to the machine and
             {YYYYMMDD} is the year, month and day in numeric
             format. These files may be used for audit purposes.
games_data - Contains game performance data files that are created
             for every event, with the exception of Cash Tickets,
             that has occurred on the video gambling machine.
             The file names have the format
             games_{VGMID}_{YYYYMMDD}_{HHMMSS}_{REASON}.txt where
             {VGMID} is the video gambling machine identification
             number assigned to the machine, {YYYYMMDD} is the
             year, month and day in numeric format, {HHMMSS} is the
             hour, minutes, and seconds, and {REASON} is reason
             that caused the file to be created. These files may be
             used for audit purposes.
progressive_logs - Contains log files for progressive jackpot wins
                   with meter data. The file names have the format
                   progressive_{VGMID}_{YYYYMMDD}.txt where {VGMID}
                   is the video gambling machine identification
                   number assigned to the machine and {YYYYMMDD} is
                   the year, month and day in numeric format. These
                   files may be used for audit purposes.
readme.txt - this file.

The columns of data have the following meaning:
$$BS - Base jackpot amount
$$CR - Credit available for play
```

$$ES - Jackpot escrow amount
$$IN - Lifetime amount in
$$JP - Jackpot amount
$$MX - Maximum jackpot amount
$$PD - Lifetime amount paid
$$PL - Lifetime amount played
$$WN - Lifetime amount won
After $$ES - Escrow amount after win
After $$JP - Jackpot amount after win
Amount$ - Amount of progressive jackpot won. This amount may be lower than
Before $$JP if capping is reached with additional wins.
Before $$ES - Escrow amount before win
Before $$JP - Jackpot amount before win
Date - Date of record
Denom$ - Game denomination (bet increment if no denomination)
Game Name - Name of game
Games PL - Lifetime games played
Games WN - Lifetime games won
Location - Name of city, town, or county
Name - Name of licensed establishment
PGM# - Program name and revision
Progressive Name - Name of progressive
Reason - Event reason
Serial - Machine serial number
Ticket# - Cash ticket sequential number
Ticket$ - Cash ticket amount
Time - Time of record in 24 hour format
Type - Game type
VGMID - VGM identification decal number

The events recorded in audit_log files have the following meaning:
After Jackpot Alter - Machine data after jackpot change
After Memory Clear - Machine data after lifetime memory clear
Before Jackpot Alter - Machine data before jackpot change
Before Memory Clear - Machine data before lifetime memory clear
Cash Accessed - Cash area accessed
Cash Ticket - Cash ticket printed
Day Start - Start of day for logging (00:00:00)
Day End - End of day for logging (23:59:59)
Logic Accessed - Logic area accessed
Manual Request - Manual request after audit key usage
New Software - New software loaded on machin

Appendix H: Sample ASD Data Files

log_470092_20080120_000000s.txt

Reason	Date	Time	Ticket#	Ticket$	$$IN	$$PL	$$WN	$$PD	$$CR	Games PL	Games WN	Name	Location	VGMID	PGM#	Serial
Day Start	01/20/2008	00:00:00S			94658.71	89604.70	85742.87	85626.14	0.00	644561	26083	Bob's Bar	Helena	470092	705352	700073242186
Before Jackpot Alter	01/20/2008	00:06:31S			95431.76	90092.30	85841.26	85742.45	0.00	644582	26098	Bob's Bar	Helena	470092	705352	700073242186
After Jackpot Alter	01/20/2008	00:06:31S			95431.76	90092.30	85841.26	85742.45	0.00	644582	26098	Bob's Bar	Helena	470092	705352	700073242186
Cash Ticket	01/20/2008	00:12:13S	4924621	220.40	95717.91	90239.59	86335.33	86231.86	0.00	644597	26105	Bob's Bar	Helena	470092	705352	700073242186
Cash Ticket	01/20/2008	00:22:52S	4924622	227.86	96498.67	90810.39	86977.86	86595.85	0.00	644672	26119	Bob's Bar	Helena	470092	705352	700073242186
Cash Ticket	01/20/2008	00:32:24S	4924623	712.83	96845.01	91267.10	87181.37	87321.53	0.00	644707	26138	Bob's Bar	Helena	470092	705352	700073242186
Cash Ticket	01/20/2008	00:34:02S	4924624	375.80	97095.33	91704.02	87289.35	87634.22	0.00	644746	26140	Bob's Bar	Helena	470092	705352	700073242186
Cash Ticket	01/20/2008	00:35:19S	4924625	115.26	97385.10	91734.22	87881.32	88306.90	0.00	644770	26153	Bob's Bar	Helena	470092	705352	700073242186
Cash Ticket	01/20/2008	00:38:57S	4924626	36.84	97807.68	92060.46	88341.84	88583.05	0.00	644834	26158	Bob's Bar	Helena	470092	705352	700073242186
Logic Accessed	01/20/2008	00:39:30S			98222.43	92077.72	88431.83	89148.14	0.00	644916	26177	Bob's Bar	Helena	470092	705352	700073242186
Manual Request	01/20/2008	00:41:38S			98732.88	92667.08	88926.05	89244.94	0.00	644980	26180	Bob's Bar	Helena	470092	705352	700073242186
Cash Ticket	01/20/2008	01:46:52S	4924627	602.57	98894.26	93222.11	89692.77	90040.55	0.00	645054	26190	Bob's Bar	Helena	470092	705352	700073242186
Cash Ticket	01/20/2008	02:58:13S	4924628	128.21	99410.30	93981.63	89707.54	90107.08	0.00	645146	26197	Bob's Bar	Helena	470092	705352	700073242186
Before Memory Clear	01/20/2008	03:10:19S			99433.12	94017.49	89879.32	90815.96	0.00	645177	26203	Bob's Bar	Helena	470092	705352	700073242186
After Memory Clear	01/20/2008	03:10:19S			99433.12	94017.49	89879.32	90815.96	0.00	645177	26203	Bob's Bar	Helena	470092	705352	700073242186
Cash Ticket	01/20/2008	03:11:45S	4924629	752.65	99490.50	94714.44	90097.87	91521.82	0.00	645223	26214	Bob's Bar	Helena	470092	705352	700073242186
Logic Accessed	01/20/2008	04:15:16S			99533.34	95256.77	90205.15	92195.28	0.00	645303	26221	Bob's Bar	Helena	470092	705352	700073242186
Cash Ticket	01/20/2008	04:26:52S	4924630	562.77	100036.61	95353.33	90466.04	92691.16	0.00	645369	26230	Bob's Bar	Helena	470092	705352	700073242186
Cash Ticket	01/20/2008	04:32:56S	4924631	639.73	100114.89	95586.56	90776.02	92930.02	0.00	645447	26249	Bob's Bar	Helena	470092	705352	700073242186
Cash Ticket	01/20/2008	05:34:02S	4924632	549.41	100737.40	95987.51	91345.95	93606.39	0.00	645539	26260	Bob's Bar	Helena	470092	705352	700073242186
Day End	01/20/2008	23:59:59S			100737.40	95987.51	91345.95	93606.39	0.00	645539	26260	Bob's Bar	Helena	470092	705352	700073242186

~L‹ [Õ4Ñ*iò°šÙ¡Q½€Á±/ÄÉÍÀá#^ÂÎ´thÉ#9´N————————————————————————ÚS¦ëCAnv››†ò————————————————————————

games_470092_20080120_00031145s_logic_access_ticket.txt

Game Name	Type	Denom$	$$PL	$$WN	Progressive Name	$$JP	$$ES	$$PD	$$BS	$$MX
Classic	Keno	0.05	5956.00	1411.00	6 of 6	300.00	0.00	1340.00	200.00	800.00
Classic	Keno	0.05	5956.00	1411.00	7 of 7	794.00	0.00	1175.00	400.00	800.00
Classic	Keno	0.05	5956.00	1411.00	8 of 8	800.00	700.00	815.00	800.00	800.00
Classic	Keno	0.05	5956.00	1411.00	9 of 9	800.00	600.00	0.00	800.00	800.00
Classic	Keno	0.05	5956.00	1411.00	10 of 10	733.00	0.00	428.00	200.00	800.00
Classic	Keno	0.25	9726.00	8597.00	6 of 6	800.00	200.00	0.00	800.00	800.00
Classic	Keno	0.25	9726.00	8597.00	7 of 7	757.00	0.00	755.00	400.00	800.00
Classic	Keno	0.25	9726.00	8597.00	8 of 8	634.00	0.00	6473.00	600.00	800.00
Classic	Keno	0.25	9726.00	8597.00	9 of 9	800.00	500.00	2140.00	800.00	800.00
Classic	Keno	0.25	9726.00	8597.00	10 of 10	731.00	0.00	801.00	600.00	800.00
Redneck	Keno	0.05	6687.00	327.00	6 of 6	800.00	300.00	0.00	800.00	800.00
Redneck	Keno	0.05	6687.00	327.00	7 of 7	800.00	900.00	0.00	800.00	800.00
Redneck	Keno	0.05	6687.00	327.00	8 of 8	800.00	200.00	0.00	800.00	800.00
Redneck	Keno	0.05	6687.00	327.00	9 of 9	496.00	0.00	0.00	400.00	800.00
Redneck	Keno	0.05	6687.00	327.00	10 of 10	692.00	0.00	0.00	600.00	800.00
Redneck	Keno	0.25	4922.00	4232.00	6 of 6	312.00	0.00	380.00	200.00	800.00
Redneck	Keno	0.25	4922.00	4232.00	7 of 7	742.00	0.00	2990.00	600.00	800.00
Redneck	Keno	0.25	4922.00	4232.00	8 of 8	649.00	0.00	3579.00	400.00	800.00
Redneck	Keno	0.25	4922.00	4232.00	9 of 9	753.00	0.00	1966.00	600.00	800.00
Redneck	Keno	0.25	4922.00	4232.00	10 of 10	800.00	200.00	1665.00	800.00	800.00
Firepower	Keno	0.05	3473.00	1958.00						
Firepower	Keno	0.25	7205.00	1514.00						
Hot and Hotter	Keno	0.05	2264.00	289.00	6 of 6	800.00	900.00	0.00	800.00	800.00
Hot and Hotter	Keno	0.05	2264.00	289.00	7 of 7	631.00	0.00	0.00	600.00	800.00
Hot and Hotter	Keno	0.05	2264.00	289.00	8 of 8	526.00	0.00	0.00	400.00	800.00
Hot and Hotter	Keno	0.05	2264.00	289.00	9 of 9	223.00	0.00	0.00	200.00	800.00
Hot and Hotter	Keno	0.05	2264.00	289.00	10 of 10	772.00	0.00	0.00	600.00	800.00
Hot and Hotter	Keno	0.25	4311.00	3321.00	6 of 6	700.00	0.00	1475.00	600.00	800.00
Hot and Hotter	Keno	0.25	4311.00	3321.00	7 of 7	800.00	500.00	0.00	800.00	800.00
Hot and Hotter	Keno	0.25	4311.00	3321.00	8 of 8	800.00	0.00	2743.00	800.00	800.00
Hot and Hotter	Keno	0.25	4311.00	3321.00	9 of 9	793.00	0.00	1231.00	400.00	800.00
Hot and Hotter	Keno	0.25	4311.00	3321.00	10 of 10	250.00	0.00	2724.00	200.00	800.00
Lucky Bells	Keno	0.05	4401.00	1878.00	6 of 6	652.00	0.00	1569.00	400.00	800.00
Lucky Bells	Keno	0.05	4401.00	1878.00	7 of 7	516.00	0.00	1447.00	200.00	800.00
Lucky Bells	Keno	0.05	4401.00	1878.00	8 of 8	442.00	0.00	1130.00	400.00	800.00
Lucky Bells	Keno	0.05	4401.00	1878.00	9 of 9	779.00	0.00	1165.00	600.00	800.00
Lucky Bells	Keno	0.05	4401.00	1878.00	10 of 10	741.00	0.00	1200.00	600.00	800.00
Lucky Bells	Keno	0.25	4275.00	559.00	6 of 6	800.00	500.00	0.00	800.00	800.00
Lucky Bells	Keno	0.25	4275.00	559.00	7 of 7	689.00	0.00	0.00	600.00	800.00
Lucky Bells	Keno	0.25	4275.00	559.00	8 of 8	800.00	200.00	0.00	800.00	800.00
Lucky Bells	Keno	0.25	4275.00	559.00	9 of 9	800.00	900.00	0.00	800.00	800.00
Lucky Bells	Keno	0.25	4275.00	559.00	10 of 10	310.00	0.00	260.00	200.00	800.00

&õK-a¯@□íš,*5´^ôZÛæž4Ñ□úëÜ6DK1Z|…¾ÎßîQ&‹Rîýøp\
úxÛÞ(›íÚ-